ORIGINAL PARTS BOOK

SHIRE PARTS BOOK

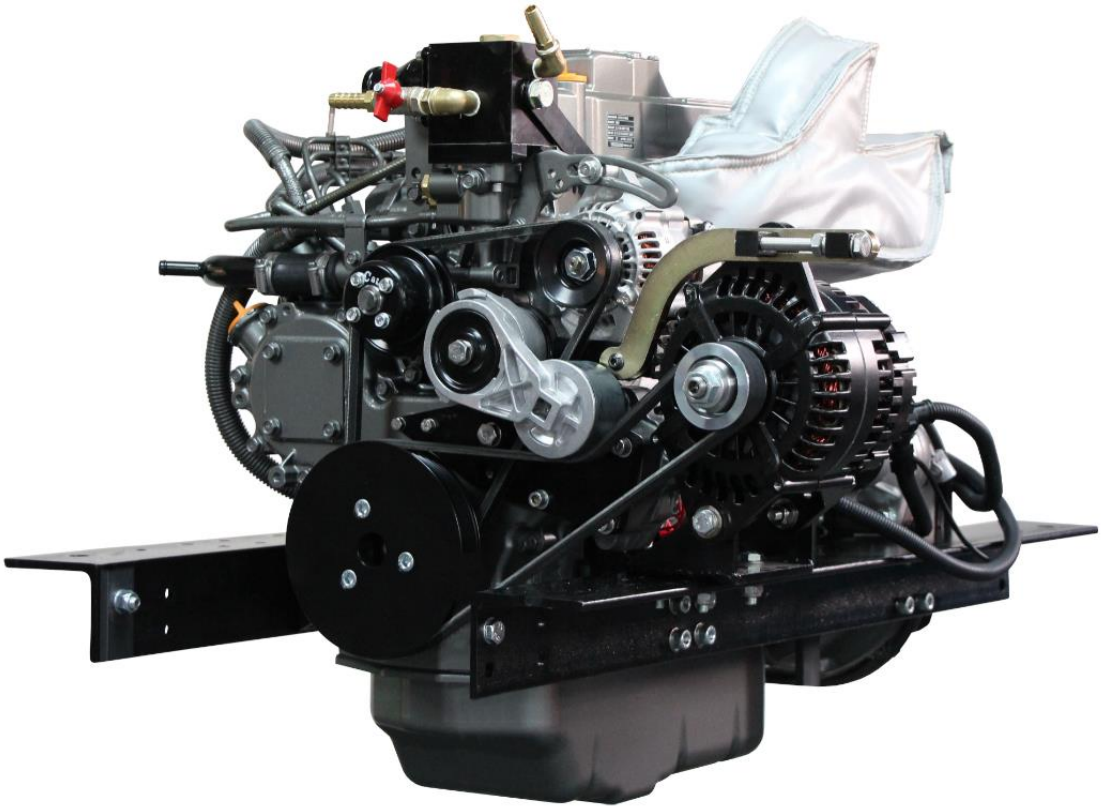

For the following engine models*:

Shire 05 50
Shire 06 50
Shire 09 50
Shire 11 50
Shire 12 50
Shire 14 50
Shire 50

*Standard Model, there may be a number of optional extras that may be fitted to an engine that are not shown in this book

RDG603A40 - Issue 8 - Issued 03/08/2021

Index

Page

Base Engine Model 3
Service Parts 4
Consumables 6
Control Panel Parts 7
Electrical Parts 9
Gearbox Parts 12
Pumps 14
Thermostat Parts 15
Header Tank Parts 16
Auto Tensioner Parts 17
'E' Kit Parts 18
Hybrid System Parts 19
Engine Mount Parts 20
Exhaust Manifold Blankets 21
Engine Parts: Injectors 22
Engine Parts: Fuel Injection Pump 23
Engine Parts: Rocker Cover Gasket & Oil Cap 24
Engine Parts: Cylinder Head Gasket 25
Accessories: Exhaust Equipment 26
Accessories: Sterngear 27
Accessories: Couplings 28
Accessories: Propellers 29
Accessories: Lever Controller 30
Dealer List 31

Base Engine Model

Shire Model	Base Engine
Shire 05 50	4TNV88-DSA
Shire 06 50	4TNV88-DSA
Shire 09 50	4TNV88-DSA
Shire 11 50	4TNV88-DSA
Shire 12 50	4TNV88-DSA
Shire 14 50	4TNV88-DSA
Shire 50	4TNV88-BDYED-SH

On the E.P Barrus Website there is a Shire 38 Parts Book, Shire 40 Parts Book, Shire 45 Parts Book and Shire 50 Parts Book which has a more extensive list of parts available for your engine. To access the Shire Parts Books on the internet, type the following short link into your search engine:

https://www.barrus.co.uk/divisions/marine/diesel/shire/downloads/shire-parts/?p=1

Service Parts

	Description	Part No.	Model
	Primary Fuel Filter	RDG2238	Shire 05 50 Shire 06 50
	Primary Fuel Filter	RDG9188346	Shire 09 50 Shire 11 50 Shire 12 50 Shire 14 50 Shire 50
	Secondary Fuel Filter	119802-55810	All
	Air Filter Element	RDG5795	All
	Oil Filter	129150-35170	All
	Fuel Filter Drain Screw	RDG9189022	Shire 09 50 Shire 11 50 Shire 12 50 Shire 14 50 Shire 50
	50A Alternator Belt	RDG6079	Shire 05 50 Shire 06 50 Shire 09 50 Shire 11 50 Shire 12 50 Shire 14 50

	50A Alternator Belt	RDG004A4	Shire 50 (Up to Serial No 50-02830)
	50A Alternator Belt	RDG6079	Shire 50 (From Serial No 50-02831 for Model with Belt Auto Tensioner and Dry Manifold)
	50A Alternator Belt	RDG004A4	Shire 50 (From Serial No 50-02831 for Model with Belt Auto Tensioner and Wet Manifold)
	160A Alternator Belt	RDG0047511	Shire 05 50 Shire 06 50 Shire 11 50
	160A Alternator Belt	RDG0047859	Shire 09 50
	240A Alternator Belt	RDG0047511	Shire 11 50
	240A Alternator Belt	RDG0047498	Shire 12 50 Shire 14 50 Shire 50

Consumables

	Description	Part No.	Model
	Engine Oil 10W40 CD 5L Container (This can also be used for a PRM 150 and PRM 280 Gearbox) NOTE: This part number supersedes RDG2797	RDG6110	All
	Diesel Fuel Additive 500ml Container	RDG80210219	All

Control Panel Parts

*** The Shire 05 50, Shire 06 50, Shire 09 50 and Shire 11 50 used a different type of panel which is no longer available. If the Control Panel or any of the parts on it require replacement the newer Standard/Deluxe Control Panel would be required.**

	Description	Part No.	Model
	Standard Control Panel	RDG20710110	All*
	Deluxe Control Panel	RDG20710111	All*
	Ignition Switch	RDG215A5	All
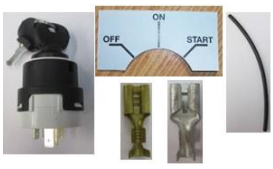	Ignition Switch Kit (to replace ignition switches fitted before 2016)	RDG215A6 (SS1626)	All
	Tacho Gauge	RDG20710158	All
	Oil Pressure Gauge	RDG21710160	All
	Voltmeter Gauge	RDG21710161	All
	Water Temperature Gauge	RDG21710159	All

	Control Panel Warning Light	RDG20910163	All

Electrical Parts

	Description	Part No.	Model
	Extension Loom (2.3m)	RDG4041	All
	50A Alternator	AND0286	All
	150A Alternator (160A Alternator originally supplied but is no longer available)	RDG20110201	Shire 05 50 Shire 06 50 Shire 09 50
	240A Alternator	RDG2019682	Shire 11 50 Shire 12 50 Shire 14 50 Shire 50
	Starter Motor	SHI0112	All
	Stop Solenoid	119653-77950	All
	Electric Fuel Pump	RDG504A90	All
	Water Temperature Switch	121250-44901	All

	Water Temperature Sender	RDG6765	All
	Water Temperature Sender and Switch	RDG2189446	Shire 50 (Serial No 45-02818 onwards)
	Oil Pressure Sensor	RDG6752	Shire 05 50 Shire 06 50
	Yanmar Oil Pressure Switch	114250-39450	Shire 05 50 Shire 06 50
	Oil Pressure Switch / Sensor	RDG2189445	Shire 09 50 Shire 11 50 Shire 12 50 Shire 14 50 Shire 50
	Engine Stop Control System Fuse (40 Amp)	RDG3246	All
	Control Panel Supply Fuse (15 Amp)	RDG3245	All
	Engine Start Control System Fuse (15 Amp)	RDG3245	All
	Glow Plug Fuse (40 Amp)	RDG3246	All

	Starter Relay	RDG1396	All
	Cold Start Relay	RDG5279	Shire 50

Gearbox Parts

	Description	Part No.	Model
	Damper Drive Plate for PRM 150 D2 / D3	RDG1766	All
	Heavy Duty Drive Coupling for PRM 150 D2 / D3 (Option)	RDG7080	All
	Damper Drive Plate for PRM 260 / 280 D2 / D3	RDG1957	All
	PRM 150 D2 Gearbox (Unless the optional D3 3:1 Ratio gearbox has been fitted)	RDG1765 (RDG1959)	All
	Gearbox Oil Cooler (This replaces ALL previous oil coolers fitted on engines)	RDG909A19	All*
	Straight Reducer 35 - 28mm Hose	RDG3018381	All
	Gearbox Oil Cooler Hose (Long)	RDG5690	All
	Gearbox Oil Cooler Hose (Short)	RDG5295	All

	Gearbox Oil Cooler Water Hose 28mm x 28mm	RDG1883	All

*** Modifications may be required for the Oil Cooler to fit**

Pumps

	Description	Part No.	Model
	Sump Pump ¾”	RDG2837	All
	Gearbox Pump ¾”	RDG303A12	All

Thermostat Parts

	Description	Part No.	Model
	Thermostat (71°) (Fitted to twin thermostat engines)	129155-49801	All
	Thermostat (82°) (Fitted to twin thermostat engines)	129457-49801	Shire 05 50 Shire 06 50
	Thermostat (86°) (Fitted to thermostat engines)	RDG909A7	Shire 14 50 Shire 50
	Thermostat (88°) (Fitted to twin thermostat engines)	L375-06203-2	Shire 09 50 Shire 11 50 Shire 12 50 Shire 14 50 Shire 50
	Thermostat Gasket (Fitted to twin thermostat)	L375-06202	Shire 09 50 Shire 11 50 Shire 12 50 Shire 14 50 Shire 50
	Thermostat Gasket (Fitted to twin thermostat)	KM385T-06209	Shire 09 50 Shire 11 50 Shire 12 50 Shire 14 50 Shire 50
	Thermostat Gasket (Fitted to engine – On Shire 05 50 & Shire 06 50 fitted to twin thermostat as well)	129350-49541	All

Header Tank Parts

	Description	Part No.	Model
	Header Tank	RDG6364	All
	Header Tank Cap	RDG1723	All
	Header Tank Hose	RDG3310	All

Auto Tensioner Parts

	Description	Part No.	Model
	Auto Belt Tensioner	RDG502A5	Shire 50 (From Serial No 50-02831 onwards)
	Auto Belt Tensioner	RE518097	Shire 50 Hybrid Engines

‘E’ Kit Parts

	Description	Part No.	Model
	3.5kW ‘E’ Kit Alternator Belt	RDG6076	Shire 05 50 Shire 06 50 Shire 09 50 Shire 11 50
	3.5kW ‘E’ Kit Alternator Belt	RDG0047511	Shire 12 50 Shire 14 50 Shire 50
	5kW ‘E’ Kit Alternator Belt	RDG6076	Shire 05 50 Shire 06 50 Shire 09 50 Shire 11 50
	5kW ‘E’ Kit Alternator Belt	RDG0047511	Shire 12 50 Shire 14 50 Shire 50

Hybrid System Parts

	Description	Part No.	Model
	48 Volt Alternator Belt (Port)	RDG004A219	Shire 50 (From Serial No xx-02638)
	48 Volt Alternator Belt (Starboard)	RDG004A220	Shire 50 (From Serial No xx-02638)
	48 Volt x 60 Amp Balmar Alternator	RDG0047498	Shire 40/50 (Optional Alternator)

Engine Mount Parts

	Description	Part No.	Model
	Engine Mount	RDG3033	All
	Engine Mount Stud Kit	RDG1867	All

Exhaust Manifold Blankets

	Description	Part No.	Model
	Exhaust Blanket	RDG9047745	Shire 50 (From Serial No 50-02831)

Engine Parts: Injectors

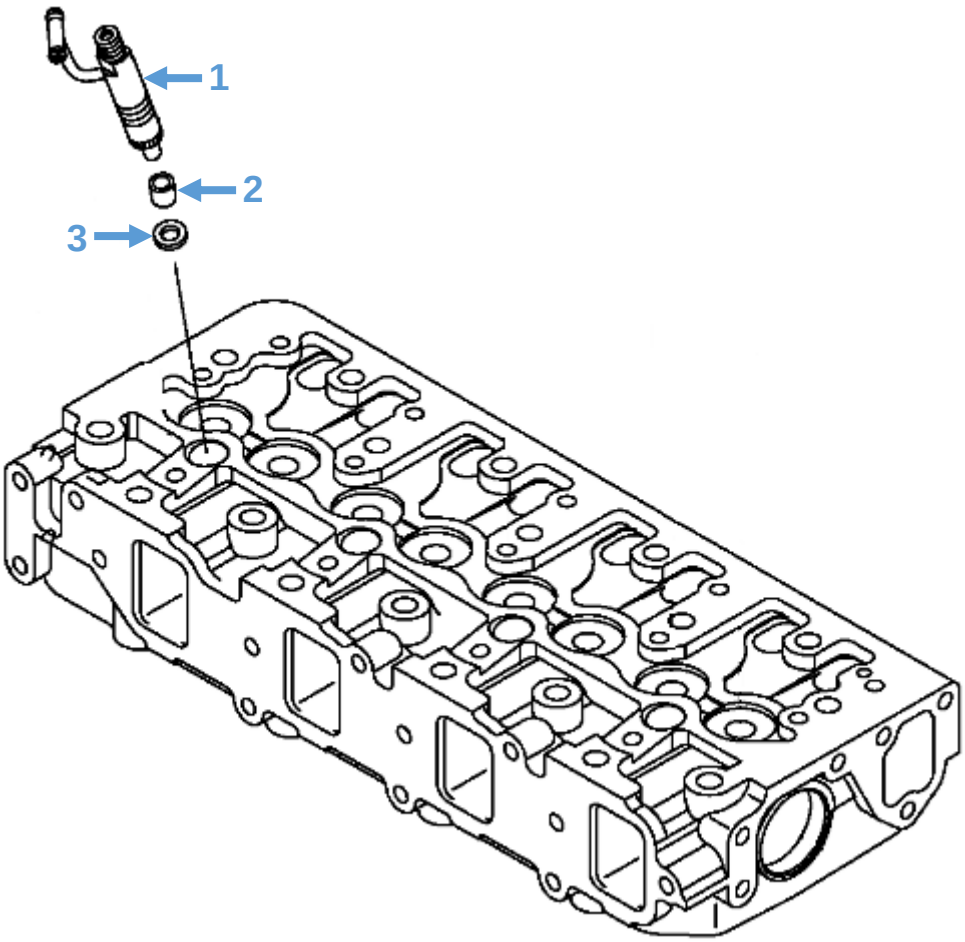

Diagram No.	Description	Part No.	Model
1	Injector	729602-53101	Shire 05 50 Shire 06 50 Shire 09 50 Shire 11 50 Shire 12 50 Shire 14 50
		729604-53200	Shire 50
2	Injector Protector	119802-11870	All
3	Injector Seat	119625-11880	All

Engine Parts: Fuel Injection Pump

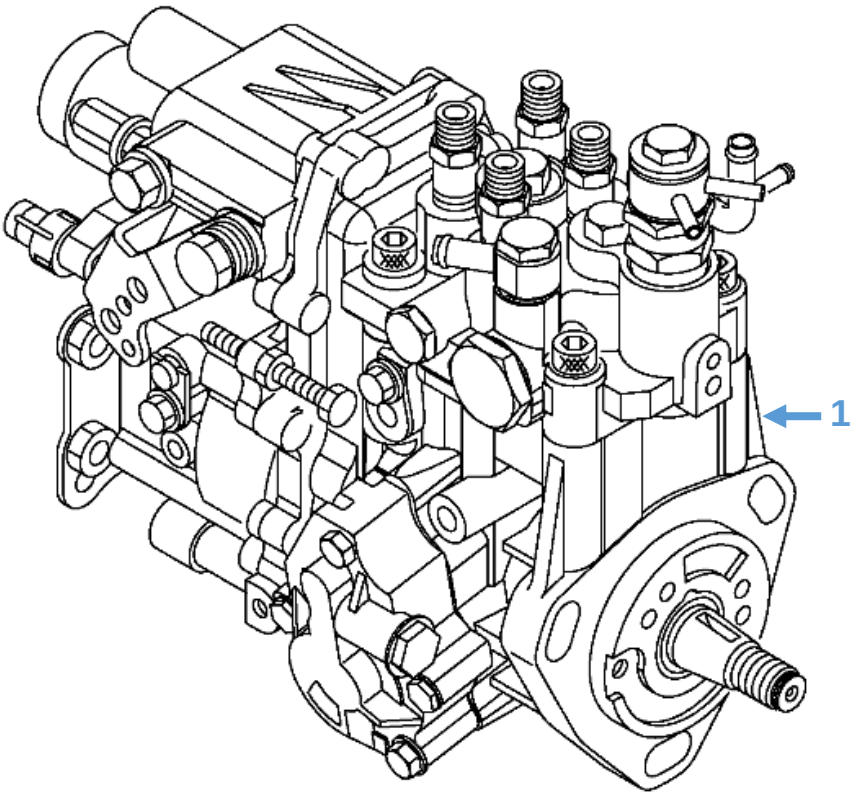

Diagram No.	Description	Part No.	Model
1	Fuel Injection Pump	729602-51310	Shire 05 50 Shire 06 50 Shire 09 50 Shire 11 50 Shire 12 50 Shire 14 50
		729688-51301	Shire 50

Engine Parts: Rocker Cover Gasket & Oil Cap

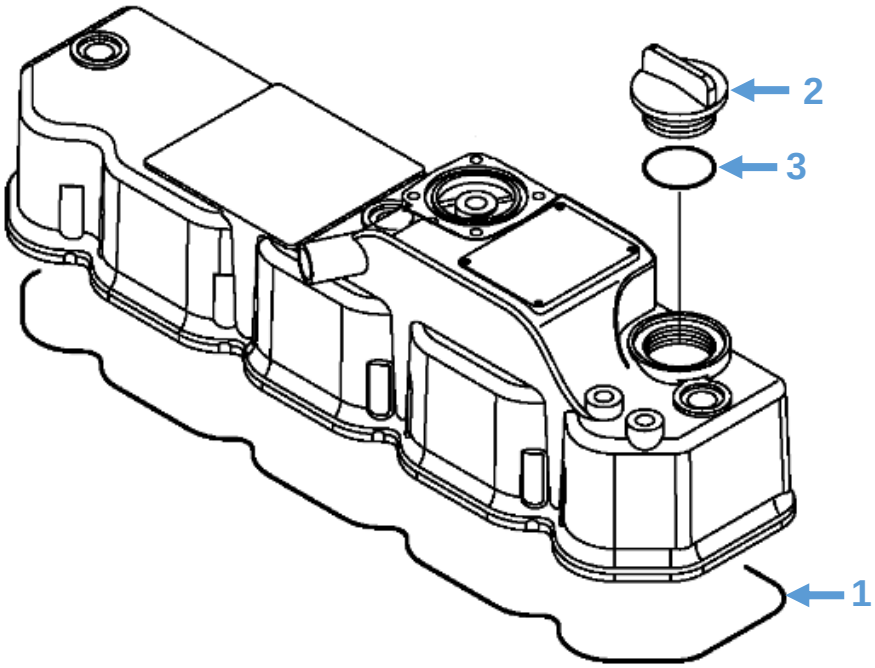

Diagram No.	Description	Part No.	Model
1	Rocker Cover Gasket	129601-11310	All
2	Oil Cap	124160-01751	All
3	Oil Cap O-Ring	24311-000320	All

Engine Parts: Cylinder Head Gasket

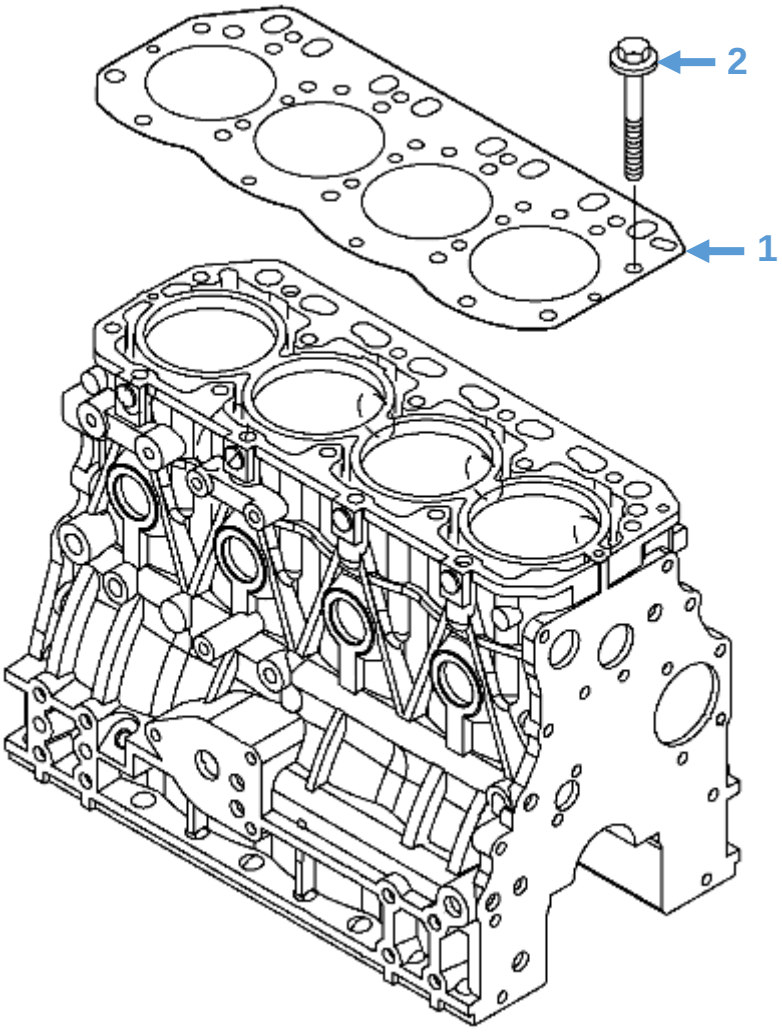

Diagram No.	Description	Part No.	Model
1	Cylinder Head Gasket	129407-01340	All
2	Cylinder Head Bolt	129150-01200	All

Accessories: Exhaust Equipment

	Description	Part No.	Model
	Exhaust Coupling 1.5”	RDG1916	All
	Flexible Exhaust Pipe Blanket	RDG2477	All
	Flexible Exhaust 1.5”	RDG1879	All
	Dry Exhaust Silencer 1.5”	RDG1911	All
	Hospital Silencer 1.5”	RDG6536	All
	1 ½” F x 1 ½” F BSP 90 Elbow	RDG5898	All

Accessories: Sterngear

	Description	Part No.	Model
	30” x 1.5” Diameter Propeller Shaft	EPB3841	All
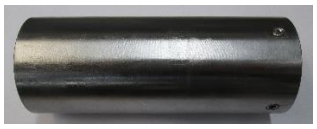	Weldable Sterntube	EPB5534	All
	Flexible Shaft Seal (to suit 1.5” shaft)	EPB5536	All

Accessories: Couplings

	Description	Part No.	Model
	R&D Flexible Coupling Disc	RDG9129347	All
	R&D Split Boss Clamp Coupling	RDG1079349	All
	Centaflex Type 16 Coupling 1.5”	RDG2779	All

Accessories: Propellers

	Description	Part No.	Model
	18” x 12” 3 Blade Propeller	18X123PB	All*
	19” x 12” 3 Blade Propeller	19X123PB	All*

Suitable for a 1.5” Shaft, 12:1 Taper

Accessories: Lever Controller

	Description	Part No.	Model
	Single Lever Control Unit (side mounted)	RDG92010055	All
	3 Metre Cable	RDG92010056	All

Dealer List

Area	Company	Telephone	Email
BERKSHIRE	Driveline Marine	0118 942 3877	tam@drivelinemarine.com
	Marcus Marine Engineering Ltd (Servicing, Repairs & Breakdowns only)	07900890911	Marcus@marcusmarine.co.uk
BRISTOL	Advance Marine	01275 815910	phil@advancemarine.co.uk
CHESHIRE	Midland Chandlers	01928 751 800	preston.brook@midlandchandlers.co.uk
	Nantwich Canal Centre Ltd	01270 625122	info@nantwichcc.com
CUMBRIA	Windermere Aquatic Ltd	01539 442121	service@aquaticboatcentres.com
DERBYSHIRE	Midland Chandlers	01283 701445	willington@midlandchandlers.co.uk
DEVON	Sleeman & Hawken Ltd	01626 778266	sales@sleeman-hawken.co.uk
ESSEX	French Marine Motors Ltd	01206 305233 01255 850303	info@frenchmarine.com
HAMPSHIRE	Marine Power Ltd	0238 0403918	sales@marine-power.co.uk
HERTFORDSHIRE	Lee Valley Marina	01920 870499 01920 293101	stansteadmarina@vibrantpartnerships.co.uk
	Keypart Ltd	01923 276000	sales@keypart.com
LEICESTERSHIRE	Foxton Boat Services Ltd	01162 792285	foxtonboats@btinternet.com
LONDON	Lee Valley Marina	020 88061717	springfieldmarina@vibrantpartnerships.co.uk
MIDDLESEX	Lindon Lewis Marine	01932 247427	service@pushtheboatout.com
NORTHAMPTON	Grand Junction Boat Co.	01604 858043	info@boatrepairs.uk.com
	Midland Chandlers	01788 891401	braunston@midlandchandlers.co.uk
NOTTINGHAM	Farndon Marina	01636 705483	info@farndonmarina.co.uk
STAFFORDSHIRE	JD Boat Services Ltd	01902 791811	david@jdboats.co.uk
	Midland Chandlers	01785 712437	penkridge@midlandchandlers.co.uk
	River Canal Rescue	01785 785680	enquiries@rivercanalrescue.co.uk
	Stone Boatbuilding Company	01785 812688	stonechandlery@aol.com
	Streethay Wharf	01543 414808	office@streethaywharf.co.uk
WARWICKSHIRE	Springwood Haven Leisure Ltd	0845 4566572	enquiries@springwoodhaven.co.uk
WILTSHIRE	Devizes Marina	01380 725300	sales@devizesmarina.com

WORCESTERSHIRE	Crafted Boats Ltd	01527 876438	craftedboats@btconnect.com
	Evesham Marina	01386 768500	info@eveshammarina.co.uk
	Starline Narrowboats	01531 632003	enquiries@starlinenarrowboats.co.uk
YORKSHIRE	Rodley Boat Centre	01132 576132	rodleyboatcentre@msn.com
MONMOUTHSHIRE	Castle Narrowboats	01873 830001	info@castle.narrowboats.co.uk
EIRE	Southshore Marina & Diesel Ltd	028383 41010	info@southshoremarine.co.uk