ORIGINAL INSTRUCTION

SHIRE CANAL ENGINE MANUAL

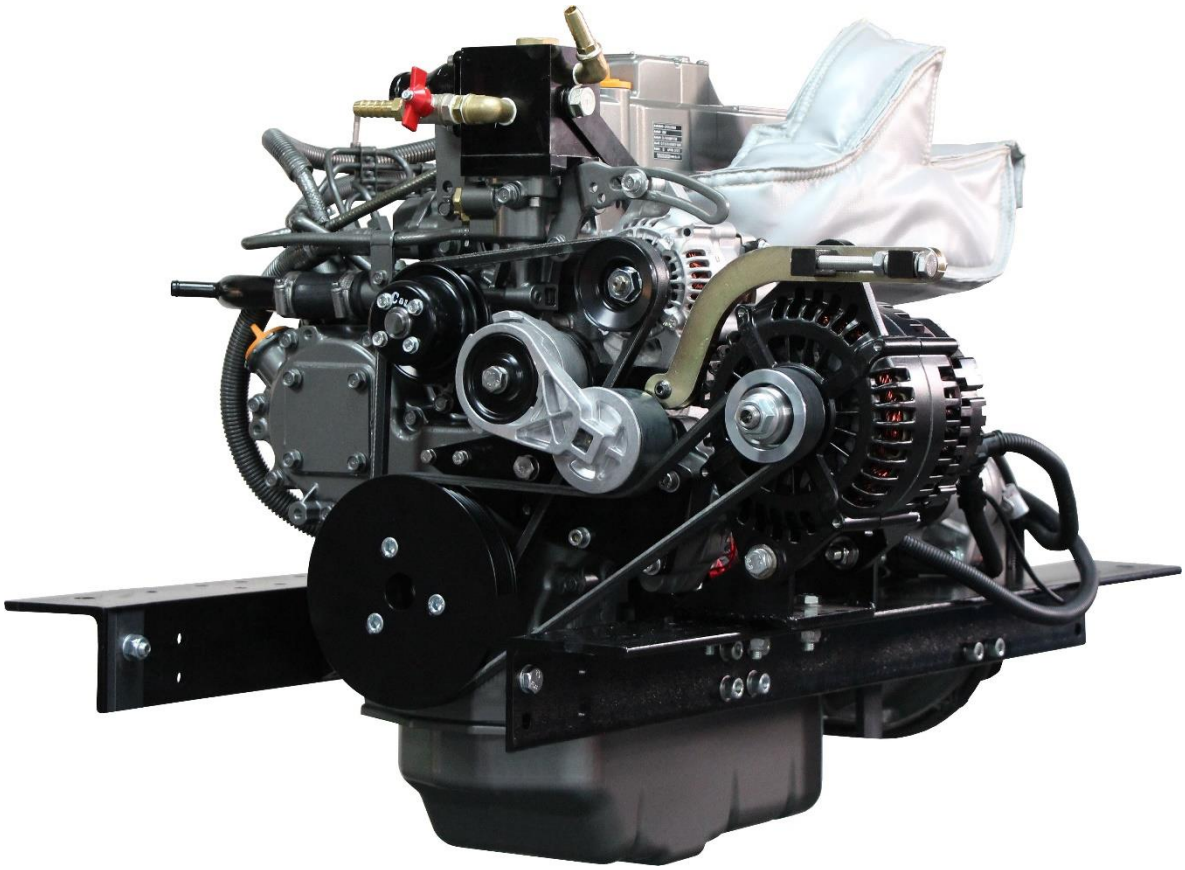

For the following engine models:
Shire 38
Shire 40
Shire 45
Shire 50

RDG603A20 - Issue 18

SAFETY

E.P. Barrus is concerned for your safety. We use safety statements throughout the manual to call your attention to the potential hazards associated with the operation of your Shire engine.

Follow the precautions listed throughout the manual before operation, during operation and during servicing/maintenance procedures for your safety, the safety of others and to protect the performance of your engine.

Safety alert symbols appear throughout the manual. It means attention, be alert as your safety is involved. Please read and follow the message that appears after the safety alert symbol.

NOTICE:	This indicates a situation which can cause damage to the machine, personal property and/or the environment or cause the equipment to operate improperly
CAUTION:	This indicates a hazardous situation which, if not avoided, could result in minor or moderate injury.
WARNING:	This indicates a hazardous situation which, if not avoided, could result in death or serious injury.
DANGER:	This indicates a hazardous situation which, if not avoided, will result in death or serious injury.

Engine Details

Engine Serial Number:	

Please enter your engine serial number in the space provided above. Please quote the engine identification number during any enquiry or when ordering spare parts. Information about the engine serial number and its location on the engine can be found in **SECTION 2** of the manual.

Shire Engine Manuals and Shire Parts Books

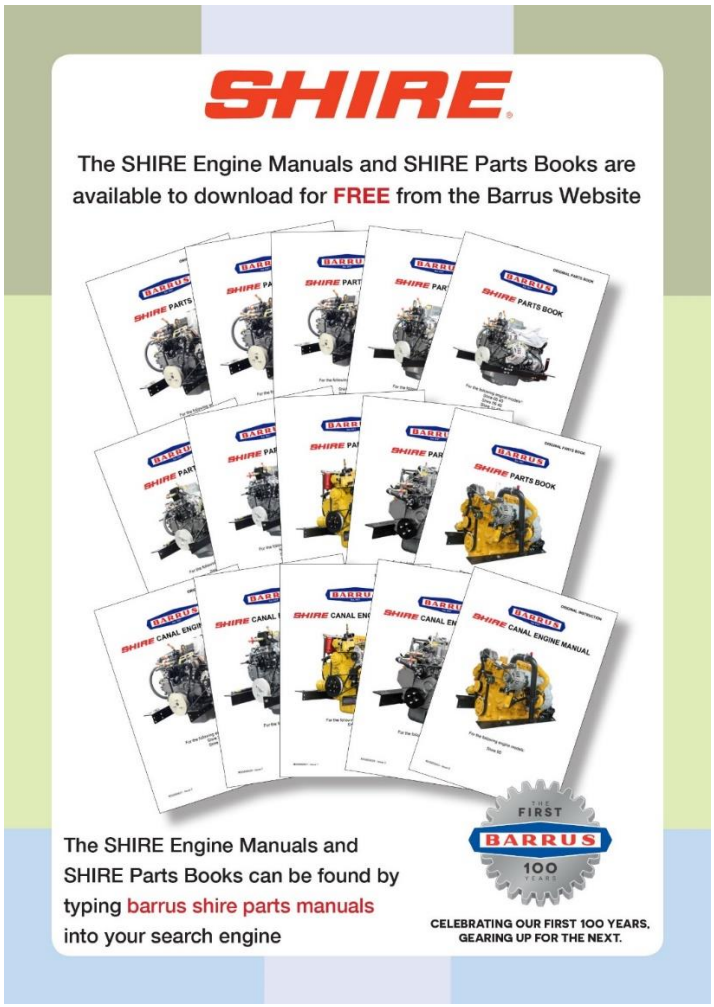

To access the Shire Engine Manuals and Shire Parts Books on the internet type the following short links into your search engine:

https://www.barrus.co.uk/shire-manuals/
https://www.barrus.co.uk/shire-parts/

Operators Manual

NOTICE:

THIS MANUAL FORMS AN INTEGRAL PART OF THE ENGINE IT ACCOMPANIES, IF A TRANSFER OF TITLE OCCURS, IT MUST ALWAYS BE HANDED OVER TO THE NEW OWNER.

Thank you for purchasing this Shire Canal Boat Marine Engine from E.P.Barrus. This manual has been compiled to help you to operate your engine and its associated parts with safety and pleasure. Please read it carefully in conjunction with the Yanmar and PRM Gearbox Manuals and familiarise yourself with the engine and its parts before operation. The PRM Gearbox Manual is also available from the PRM website:

www.prm-newage.com

If the engine is fitted with an E-Kit and/or Hybrid options, please also read the supplied manuals for them carefully.

The information and recommendations given in this manual are based on the latest information available at the time of publication. E.P.Barrus reserve the right to change the specification of its products and manuals without prior notice.

Depending upon the equipment specification of the engine and accessories fitted, there may be discrepancies with the information presented in this handbook. No claims may be pursued in this respect.

WARRANTY

This UK Limited Warranty provides coverage for five (5) years (or 2000 hours whichever occurs first) for recreational users and three (3) years (or 2000 hours whichever occurs first) for commercial users from the date of warranty registration. The warranty is for non-serviceable items. The repair or replacement of parts, or the performance of service under this warranty, does not extend the life of this warranty beyond its original expiry date.

To ensure that you have been registered for your warranty, please ask your Boat Builder or Engine Supplier to provide your portion of the registration form.

The Warranty will only apply if the following have been carried out:

1) The Installation Check List in the Installation Section has been fully completed.
2) The boat builder or engine installer has completed the Boat Builder Section on the Service Record Card (located at the back of this manual) regarding hand over and commissioning of boat.

E.P Barrus staff or their representatives can only carry out warranty repairs if there is suitable access and room around the engine to work safely.

Failure to complete and return the registration form to E.P Barrus will result in the warranty period starting from the date of engine manufacture <u>NOT</u> from the date of purchase.

PRM Gearboxes are covered by a three (3) year warranty for recreation users and two (2) years for commercial users.

Engine alternator, starter motor and electrical components are only covered by a one (1) year warranty.

CONDITIONS THAT MUST BE MET IN ORDER TO OBTAIN WARRANTY COVERAGE

Warranty coverage is only available from an authorised dealer in the country in which the sale occurred. Routine maintenance outlined in the Owner's Manual must be performed using genuine parts in order to maintain warranty coverage. If the customer performs maintenance,

Barrus reserves the right to make future warranty coverage possible only with proof of proper maintenance.

WARRANTY CLAIMS

Warranty claims shall be made by an authorised dealer or boat builder.
The dealer or boat builder will then arrange for the inspection and any necessary repairs. If the repairs carried out are not covered by the warranty, the purchaser shall pay for all related labour and material, and any other expenses associated with that service.

WHAT IS NOT COVERED

This limited warranty does not cover routine maintenance items, adjustments, normal wear and tear, damage caused by abnormal use, operation of the product in a manner inconsistent with the recommended operation/duty cycle section of the Owner's Manual, accident, submersion, improper installation (proper installation specification and techniques are set forth in the Operations and First time running sections in this manual), use of an accessory or part not manufactured or sold by us, or alteration or removal of parts. Expenses related to crane-out, launch, towing, storage, telephone, rental, inconvenience, slip fees, insurance coverage, loan payments, loss of time, loss of income, or any other types of accidental or consequential damages are not covered by this warranty.

Engine electrical systems fitted with alternator boost charge systems or any other electrical management systems are not covered by warranty.

Engine and fuel equipment is not covered by warranty if bio-diesel that does not comply with EN15940 is used in the fuel system (See **5. Refuelling of Section 6 – Operation**). Also, if no type of water trap is incorporated into the fuel system.

The standard alternators fitted to Shire engines are not suitable for charging lithium-ion batteries. If the standard alternators are used for charging lithium-ion batteries, they will not be covered under warranty. If lithium-ion batteries are to be used a specialist alternator will be required.

Index

Page

SECTION 1 – Safety Precautions 11

1. General 11
2. Lifting 11
3. Rotating Shafts and Belts 11
4. Exhaust System 12
5. Launching and Lifting Boats 12
6. Batteries 12

SECTION 2 – Engine Identification 14

SECTION 3 – Component Identification 15

1. Shire 38 15
2. Shire 40 16
3. Shire 45 17
4. Shire 50 18
5. Shire 50WM 19

SECTION 4 – Control Panel 20

1. Standard Control Panel 20
2. Deluxe Control Panel 20
3. Control Panel Overview 21
4. Warning Light Procedure 21
5. Overall Dimensions of the Standard Control Panel 23
6. Overall Dimensions of the Deluxe Control Panel 23

SECTION 5 – Installation 24

1. Ventilation 24
2. Engine Beds 24
3. Cooling System 24
4. Skin Tanks 24
5. Engine Cooling Water Inlet and Outlet Hose Connections 25
6. Pressurised Water Header Tank 26

7. Calorifier 27
8. Shaft Connection and Propeller Selection 28
9. Engine Anti-Vibration Mounts 29
10. Engine Alignment 31
11. Engine Inclination 32
12. Electrics 32
13. Electrical Options 33
14. Engine Oil 34
15. Fuel 34
16. Coolant 36
17. Control Cables 37
18. Domestic Battery Bank 37
19. Control Panel 38
20. Exhaust System 39
21. Hydraulic Drive Transmissions 40
22. Hydraulic Pump Drive Option (Shire 38, 40, 45, 50) 41
23. Centa Coupling CF-M-160 (RDG2779) 41
24. PRM 280DP Gearbox with Power Take Off (Option) 42
25. Installation Check List 42
SECTION 6 – Operation 44
1. Starting the engine for the first time 44
2. Starting Procedure 44
3. Stopping Procedure 45
4. Full Load Running 45
5. Refuelling 45
6. Twin Thermostats – Shire 50 and 50WM 46
7. Diesel Fuel Additive 48
8. Exhaust Back Pressure 48
9. Hybrid System (For engine with Hybrid System fitted) 48
10. Single Shift Control Lever Side Mount Operation - Optional (RDG9210055) 48

SECTION 7 – Service Procedure 49

1. Engine Oil and Filter Change 49
2. Air Filter Check and Change 50
3. Gearbox Oil Change 50
4. Disposal of Oil and Related Items 51
5. Primary Fuel Filter Drain – Shire 40, 45 & 50 52
6. Primary and Secondary Fuel Filter Change 53
7. Fuel System Bleeding 53
8. Cooling System 54
9. Belt Adjustment 55
10. Belt Maintenance 56
11. Belt Replacement 56
12. Control Panel Maintenance 57

SECTION 8 – Service Schedule 59

1. Specifications and Capacities 59
2. Service Intervals 60

SECTION 9 – Wiring Diagrams 61

1. Engine Wiring Diagram Shire 38, 40, 45 & 50(WM) 61
2. Standard Control Panel Wiring Diagram 62
3. Deluxe Control Panel Wiring Diagram 63
4. Prestolite 24 Volt 120 Amp Alternator Wiring Diagram 64

SECTION 10 – Technical Data 66

1. Engine Data 66
2. Return Diesel System 66
3. Dry Weight of Engine Data 67

SECTION 11 – Dealer List 68

SECTION 12 – Shire Parts 70

SECTION 13 – Declarations 73

1. Declaration of Conformity for Recreational Craft Propulsion Engine with the requirements of Directive 2013/53/EU. 73

2. Declaration of Conformity for Recreational Craft Propulsion Engine with the requirements of the Recreational Craft Regulations 2017 (UKCA Marking). 74

3. Declaration of Incorporation of Partly Completed Machinery 75

4. EU Declaration of Conformity with the Exhaust Emissions Requirements of Directive 2013/53/EU 79

SECTION 14 – Lubricant Safety Data Sheets 80

1. Golden Film Running In Oil 80

2. Ground Force 10W-40 88

3. Liquimatic Super ATF 97

SECTION 15 – Shire Service Record Card.....106

SECTION 1 – Safety Precautions

1. General

NOTICE:

NEVER PERMIT ANYONE TO OPERATE THE ENGINE WITHOUT PROPER TRAINING.

It is the responsibility of the installer/operator to ensure that the finished installation complies with CE Marking, UKCA Marking, relevant Health & Safety requirements, the Recreational Craft Directive and or any other legislative requirements before commissioning.
Ensure that the engine battery isolator switch is in the off position and the key removed from the control panel before carrying out any maintenance or repairs.

2. Lifting

DANGER:

CRUSH HAZARD! NEVER STAND UNDER A HOISTED ENGINE. IF THE HOIST MECHANISM FAILS, THE ENGINE WILL FALL ON YOU, CAUSING SERIOUS INJURY OR DEATH.

The Lifting points supplied with the engine are for lifting the engine/gearbox only. A suitable spreader bar must be employed to prevent over-stressing either bracket during any lift.

3. Rotating Shafts and Belts

WARNING:

SEVERE HAZARD! KEEP HANDS AND OTHER BODY PARTS AWAY FROM MOVING/ROTATING PARTS. WEAR TIGHT FITTING CLOTHING AND KEEP YOUR HAIR SHORT OR TIE BACK. REMOVE ALL JEWELLERY BEFORE COMMENCING WORK. CHECK BEFORE STARTING THE ENGINE THAT ANY TOOLS OR RAGS USED DURING MAINTENANCE HAVE BEEN REMOVED FROM THE AREA.

The engine and its accessories are not intended to be put into operation until they are integrated into the boat as a whole. No person should be in the engine compartment and the engine cover or deck hatches should be closed whilst the engine is running.

4. Exhaust System

WARNING:

EXHAUST HAZARD! NEVER OPERATE ENGINE IN A BOATS ENGINE BAY WITHOUT PROPER VENTILATION. NEVER BLOCK VENTS OR OTHER MEANS OF VENTILATION. ALL COMBUSTION ENGINES CREATE CARBON MONOXIDE GAS DURING OPERATION. ACCUMULATION OF THIS GAS COULD CAUSE ILLNESS OR EVEN DEATH.

WARNING:

BURN HAZARD! WAIT UNTIL THE EXHAUST COOLS BEFORE YOU TOUCH IT.

Exhaust gases may have temperatures as high as 650°C and contain elements which are harmful if ingested.
It is therefore essential that exhaust systems are gas tight and lagged to prevent accidental burning and inhalation of exhaust gases when inside the boat cabin.

5. Launching and Lifting Boats

Care must be taken when launching or craning new boats into or out of the waterway, so that water does not enter the engine via the exhaust system or air vents. It is recommended that these are blocked temporarily whilst undertaking this procedure.

6. Batteries

DANGER:

EXPLOSION HAZARD! NEVER SHORT OUT THE BATTERY TERMINALS, INCLUDING WHEN CHECKING THE REMAINING BATTERY CHARGE THIS WILL RESULT IN A SPARK AND MAY CAUSE AN EXPLOSION OR FIRE.

WARNING:

BURN HAZARD! BATTERIES CONTAIN SULPHURIC ACID. NEVER ALLOW BATTERY FLUID TO COME IN CONTACT WITH SKIN, EYES OR CLOTHING. SEVERE BURNS COULD RESULT. MAKE SURE THE CORRECT PERSONAL PROTECTION EQUIPMENT IS WORN.

- Batteries can produce explosive gases; keep sparks and flames away from the battery.

NO SMOKING

- Batteries contain sulphuric acid; if splashed on skin or eyes, flush well with water and seek medical advice.
- Keep battery tops and battery compartment ventilated at all times.
- If disconnecting the battery; remove the earth lead **FIRST**; and re-connect it last.
- If charging the battery; ensure that the charger is switched off before connecting and disconnecting.
- Do not tip the battery on its side.
- Please see label on battery or manufacturer's instructions for specific information.

SECTION 2 – Engine Identification

The engine serial number can be found engraved into the brass plate on the top of the engine rocker cover and stamped to the crankcase next to the starter motor. The Canal Boat Engines (CB) do not have identification initials on the engraved plate.

An example of the engine identification plate is shown below (**Figure 1**):

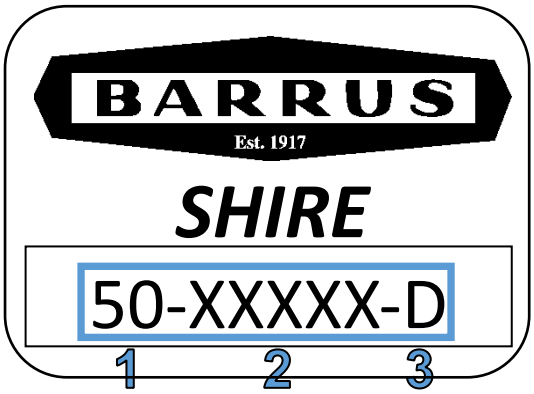

	Description
1	Engine Model
2	Serial Number
3	Indicates Model Type or Optional Extras: RB = River Boat WB = Work Boat D = Deluxe Panel 3 = 3:1 Ratio Gearbox

Figure 1: Engine Identification Badge

Description of Models:

Abbreviation	Type of Engine	Description*
CB	Canal Boat	Keel cooled dry exhaust manifold
WB	Work Boat	Seawater/Heat Exchanger cooled, dry exhaust manifold with either a dry exhaust system (same as a Canal Boat) or water injected exhaust system. Can also be used for sea going applications
RB	River Boat	Can also be used for sea going applications. Seawater/Integral exhaust manifold, heat exchanger cooled. Water injected exhaust system.
WM	Shire 50 WM (Canal Boat)	Note: Standard Shire 50 comes with a dry exhaust manifold. An optional water-cooled (WM) exhaust manifold can be supplied with the Shire 50 engine.

***Note**: There are a number of other optional extras that may be fitted to an engine that are not listed here.

A list of common item service part numbers can be found in **Section 12**, Shire Parts.

SECTION 3 – Component Identification

1. Shire 38

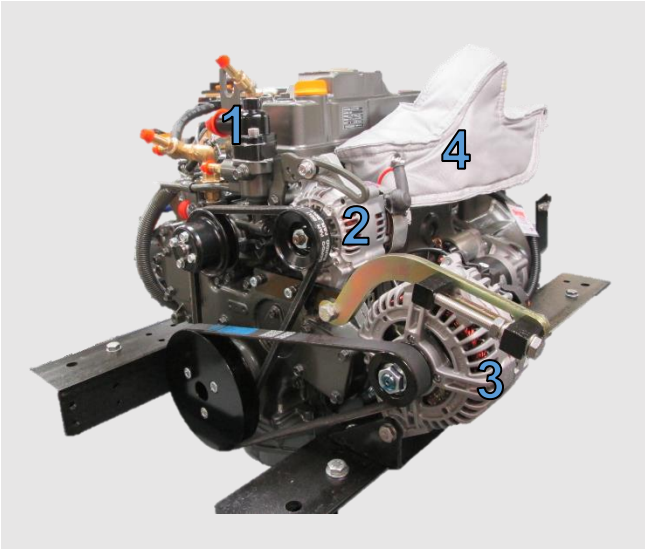

Figure 2: Shire 38 Left Side (Viewed from front)

	Description*
1	Single Thermostat Housing
2	50 Amp 12 Volt Alternator
3	125 Amp 12 Volt Alternator
4	Dry Exhaust

Figure 3: Shire 38 Right Side (Viewed from rear)

	Description*
5	Air Filter
6	Gearbox
7	Oil Filter
8	Engine Fuel Filter
9	Engine Sump Pump

***Note**: There are a number of other optional extras that may be fitted to an engine that are not shown here.

2. Shire 40

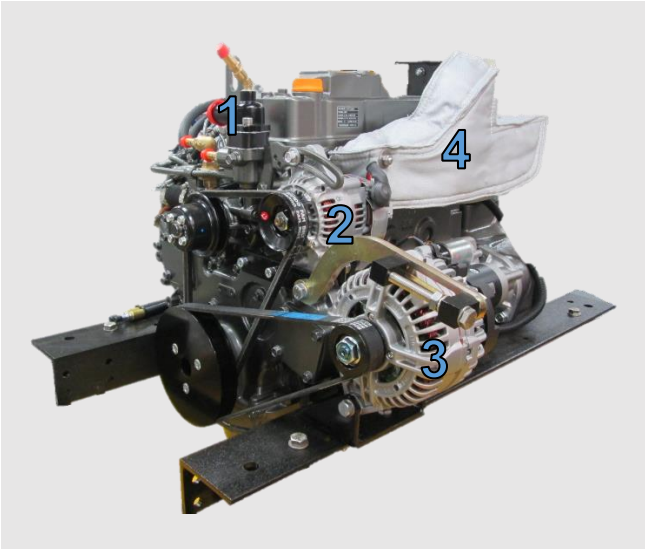

Figure 4: Shire 40 Left Side (Viewed from front)

	Description*
1	Single Thermostat Housing
2	50 Amp 12 Volt Alternator
3	150 Amp 12 Volt Alternator
4	Dry Exhaust

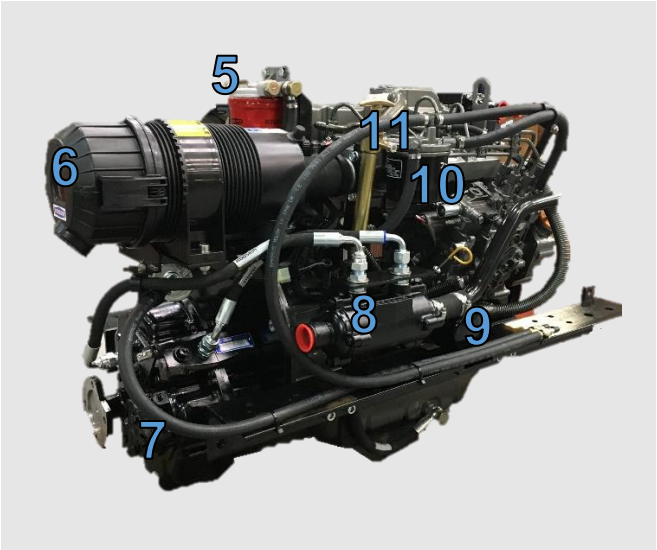

Figure 5: Shire 40 Right Side (Viewed from rear)

	Description*
5	Primary Fuel Filter
6	Air Filter
7	Gearbox
8	Oil Cooler
9	Oil Filter
10	Secondary Fuel Filter
11	Engine Sump Pump

***Note**: There are a number of other optional extras that may be fitted to an engine that are not shown here.

3. Shire 45

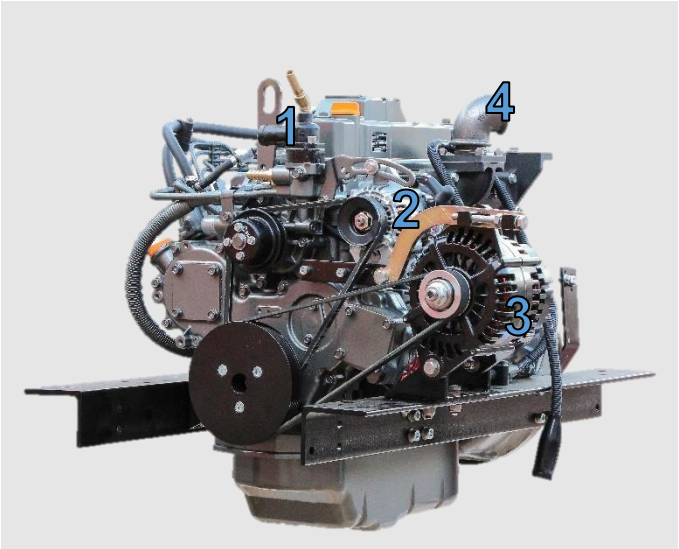

Figure 6: Shire 45 Left Side (Viewed from front)

	Description*
1	Single Thermostat Housing
2	50 Amp 12 Volt Alternator
3	240 Amp 12 Volt Alternator
4	Dry Exhaust

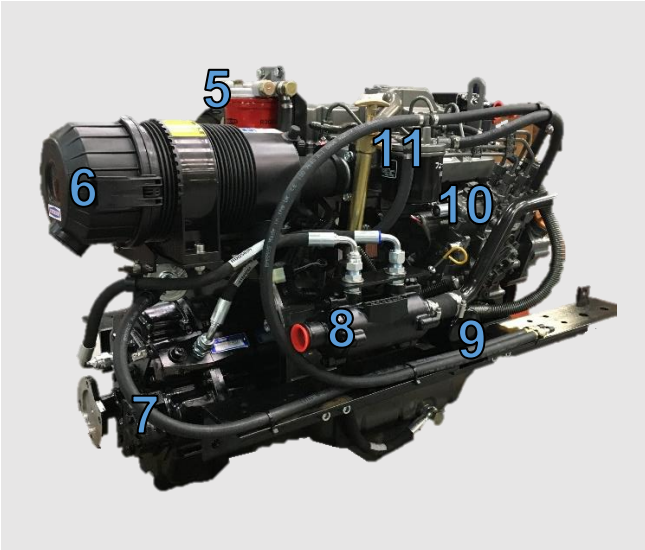

Figure 7: Shire 45 Right Side (Viewed from rear)

	Description*
5	Primary Fuel Filter
6	Air Filter
7	Gearbox
8	Oil Cooler
9	Oil Filter
10	Secondary Fuel Filter
11	Engine Sump Pump

***Note**: There are a number of other optional extras that may be fitted to an engine that are not shown here.

4. Shire 50

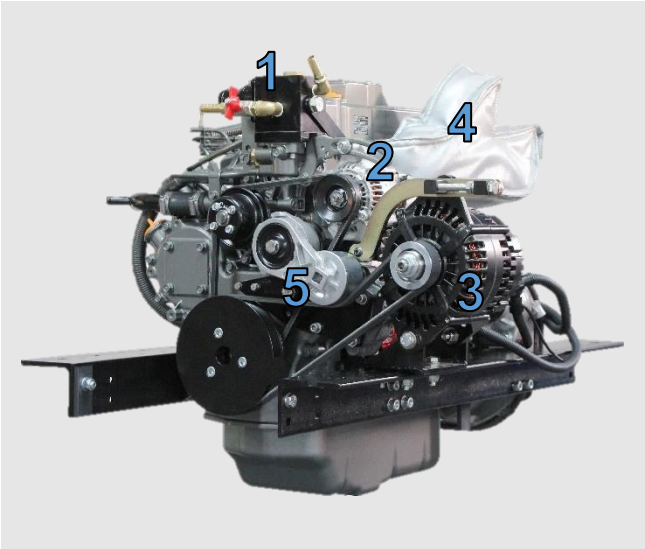

Figure 8: Shire 50 Left Side (Viewed from front)

	Description*
1	Twin Thermostat Housing
2	50 Amp 12 Volt Alternator
3	240 Amp 12 Volt Alternator
4	Dry Exhaust
5	Self Adjusting Belt Tensioner

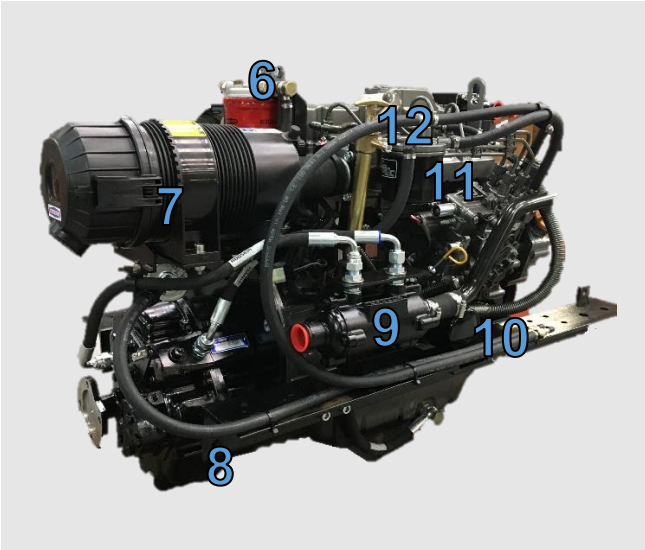

Figure 9: Shire 50 Right Side (Viewed from rear)

	Description*
6	Primary Fuel Filter
7	Air Filter
8	Gearbox
9	Oil Cooler
10	Oil Filter
11	Secondary Fuel Filter
12	Engine Sump Pump

***Note**: There are a number of other optional extras that may be fitted to an engine that are not shown here.

5. Shire 50WM

Figure 10: Shire 50 Left Side (Viewed from front)

	Description*
1	Twin Thermostat Housing
2	50 Amp 12 Volt Alternator
3	240 Amp 12 Volt Alternator
4	Water Cooled Manifold
5	Self Adjusting Belt Tensioner

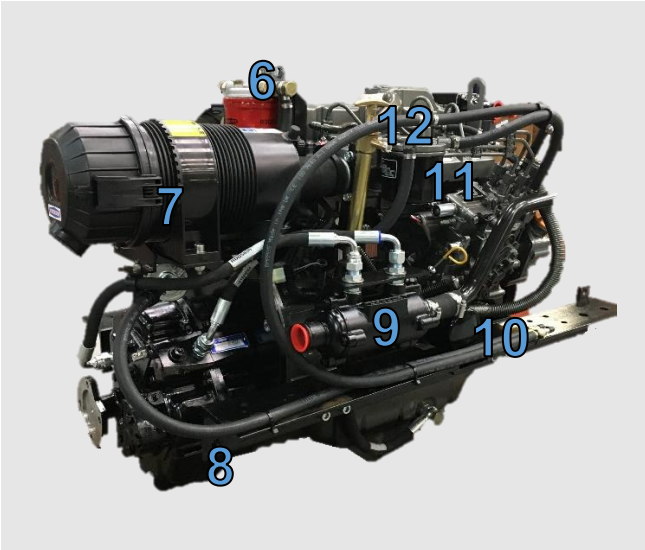

Figure 11: Shire 50 Right Side (Viewed from rear)

	Description*
6	Primary Fuel Filter
7	Air Filter
8	Gearbox
9	Oil Cooler
10	Oil Filter
11	Secondary Fuel Filter
12	Engine Sump Pump

***Note**: There are a number of other optional extras that may be fitted to an engine that are not shown here.

SECTION 4 – Control Panel

1. Standard Control Panel

Figure 12: Standard Control Panel

	Description
1	Tachometer Gauge
2	Hour Meter
3	Water Temperature Warning Light
4	Oil Pressure Warning Light
5	50A Alternator Charge Warning Light
6	125/150/240A Alternator Charge Warning Light
7	Glow Plug Light
8	Key Flap and Ignition Switch

2. Deluxe Control Panel

Figure 13: Deluxe Control Panel

	Description
1	Tachometer Gauge
2	Hour Meter
3	Water Temperature Warning Light
4	Oil Pressure Warning Light
5	50A Alternator Charge Warning Light
6	125/150/240A Alternator Charge Warning Light
7	Glow Plug Light
8	Key Flap and Ignition Switch
9	50A Alternator Output Gauge
10	Oil Pressure Gauge
11	Water Temperature Gauge

3. Control Panel Overview

- All Shire engines are supplied with a control panel.
- Depending on the model of Shire engine, the control panel will either be a standard control panel or a deluxe control panel. The following table shows which panel comes with each type of engine as standard. Please note that on certain Shire engines a different type of control panel can be ordered as an option.

Engine	Control Panel Supplied*
Shire 38, 40	Standard Control Panel
Shire 45, 50	Deluxe Control Panel

* Panel supplied as standard. On certain engines a different control panel may be supplied as an option

4. Warning Light Procedure

- When the ignition is first turned on, the control panel warning lights will come on as a bulb check. When the engine is started the warning lights will go out. Please note that the water temperature warning light and glow plug light operate slightly differently.

- The water temperature warning light will only come on for a brief period of time when the ignition is first turned on as a bulb check. It will then only illuminate in the case of the engine coolant temperature exceeding the maximum safety level.

- The glow plug light will come on when the ignition is first turned on for 5 – 8 seconds to indicate the heating system is operational. When the light goes out the engine can be started.

- Whilst the control panel is in operation all the gauges are backlit. This does not indicate a fault and is a normal function for the control panel.

- If any of the warning lights on the control panel come on **whilst** the engine is running, please follow the correct procedure as shown in the following table.

In the event of a fault, only trained and qualified personnel should undertake repairs on the engine.

	Description	Procedure for Warning Light
1	Tachometer Gauge	-
2	Hour Meter	-
3	Water Temperature Warning Light	Reduce the engine revs and stop the engine within one or two minutes. Check the coolant level (refer to **8. Cooling System of SECTION 7 - SERVICE PROCEDURE**). If the coolant level is incorrect, fill it to the correct level (refer to **8. Cooling System of SECTION 7 - SERVICE PROCEDURE**) and restart the engine. If the coolant level is correct and the fault is still present, or there is a coolant leak, please contact your local dealer.
4	Oil Pressure Warning Light	Stop the engine immediately. Contact your local dealer. Failure to stop the engine may result in permanent engine damage.
5	50A Alternator Charge Warning Light	This indicates that the alternator has stopped charging. The engine can still be operated for a short period of time. Contact your local dealer.
6	125/150/240A Alternator Charge Warning Light*	This indicates that the alternator has stopped charging. The engine can still be operated for a short period of time. Contact your local dealer.
7	Glow Plug Light	This indicates that the cold start system is operating. If the light fails to illuminate during the starting procedure contact your local dealer.
8	Key Flap and Ignition Switch	-
9	50A Alternator Output Gauge	-
10	Oil Pressure Gauge	-
11	Water Temperature Gauge	-

*Only applicable if a second alternator is fitted to the engine.

5. Overall Dimensions of the Standard Control Panel

(All Dimensions are in mm)

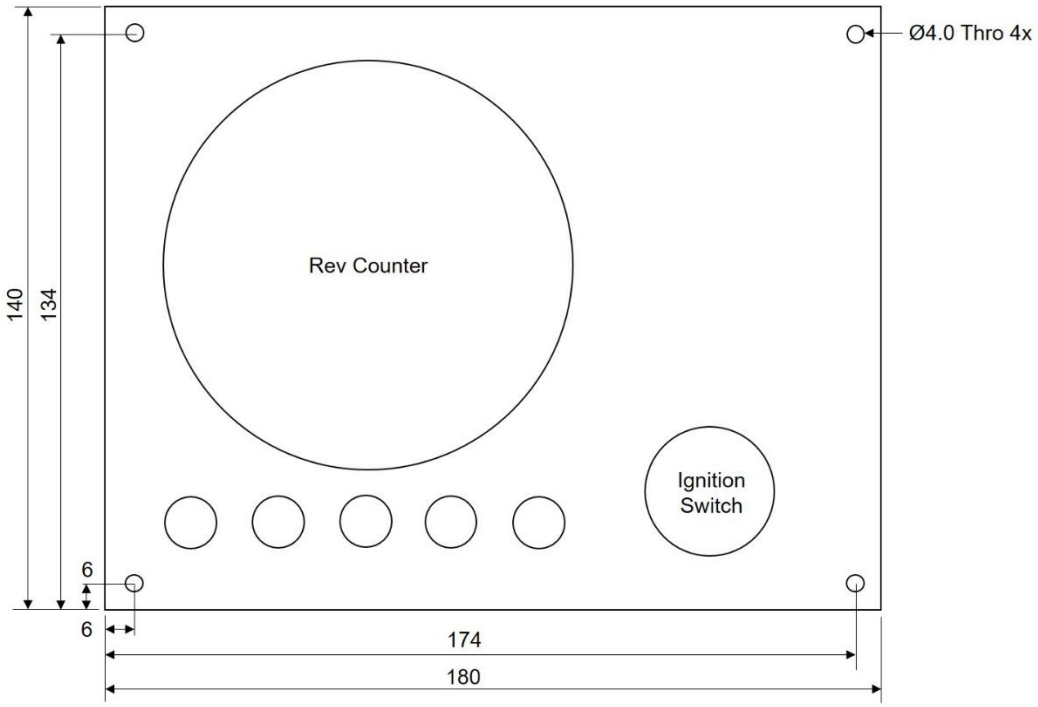

Figure 14: Standard Control Panel Dimensions

6. Overall Dimensions of the Deluxe Control Panel

(All Dimensions are in mm)

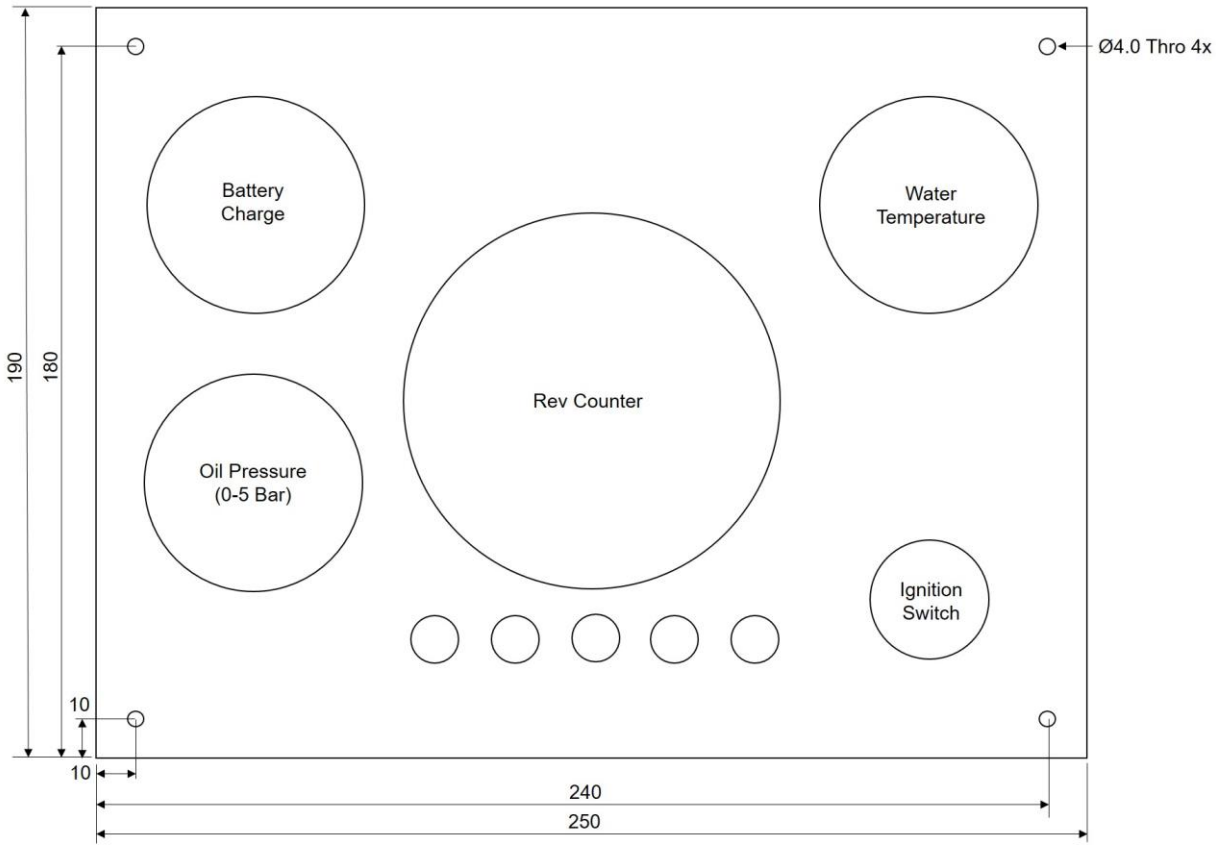

Figure 15: Deluxe Control Panel Dimensions

SECTION 5 – Installation

NOTICE:

REFER TO THE SHIRE AND YANMAR MANUALS PRIOR TO INSTALLING THE ENGINE.

1. **Ventilation**

- All internal combustion engines radiate heat and require cool, clean air to aid complete combustion.
- Please ensure that adequate engine room ventilation is provided, by fitting at least two vents of an aperture of not less than 10,000mm^2 each (16in^2).

An allowance must be made for any grills, louvres or bends placed in the airflows and generally an increase of 25% in area is sufficient to overcome any restriction problems.

2. **Engine Beds**

- These should be a minimum of 10mm thick, extended rearward and be welded to the hull and forward to the bulkhead. Webs or gussets must be welded in place midway to prevent flexing.

3. **Cooling System**

- Ensure pipe work to and from the skin tanks is of sufficient bore. Ensure tight bends and elbows are avoided or kept to a minimum (sizes are listed overleaf).

4. **Skin Tanks**

The ideal skin tank internal thickness is between 50 and 75mm, the table below will indicate a suitable tank size. However, volume will not compensate for lack of surface area. It should be recognised that fitting a large calorifier will increase the theoretical cooling capacity only until it is up to temperature. It is unlikely that a boat on the inland waterways will operate at full power for long periods of time. The engine cooling water outlets are on the right hand (starboard) side of the engine. The outside of the skin tank must be completely below the waterline all of the time for effective cooling.

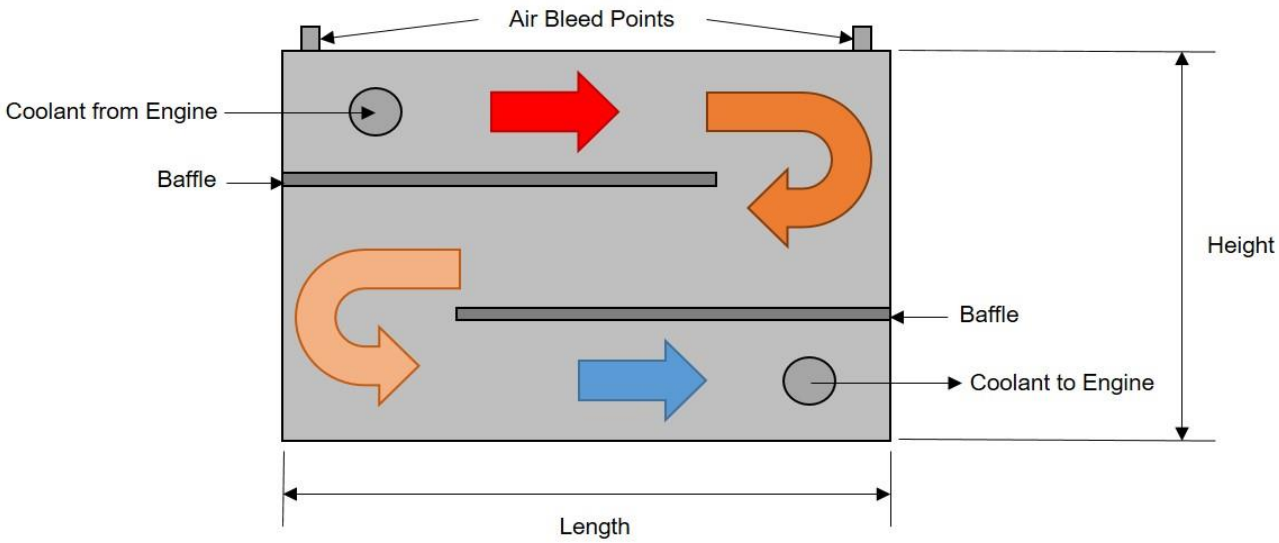

Figure 16: Skin Tank Flow Diagram

Recommended Skin Tank Size					
Engine	**HP**	**KW**	**Skin tank surface area m²**	**Suggested Height mm**	**Suggested Length mm**
50	50	37	1.1250	750	1500
45	45	34	1.0	721	1442
38-40	38-40	30-38	1.0	721	1442

The skin tank size must be increased by up to approx 10% or a separate skin tank installed to cool the hydraulic oil, if a hydraulic bow thruster is used. Please refer to Section 5 – Installation, 21. Hydraulic Drive Transmission for further information.

5. Engine Cooling Water Inlet and Outlet Hose Connections

These are on the right hand (starboard) side of the engine:

Engine	Size (mm)
Shire 38,40 & 45	28mm OD, Inlet and Outlet
Shire 50 & 50WM	35mm OD, inlet and 35mm OD, Outlet

Use a good quality hose that cannot collapse or kink and is capable of working at temperature in excess of 100°c.

A.S.A.P. Supplies LTD can supply suitable 28mm ID and 35mm ID hoses if the correct size

hoses cannot be sourced locally. The part numbers used by A.S.A.P. Supplies LTD are shown in the following table.

A.S.A.P Supplies Part Number	Size of Hose (mm)
206428	28mm
206435	35mm

A.S.A.P. Supplies LTD can be contacted by:

Telephone	+44 1502 716993
Internet	www.asap-supplies.com

Please be aware that other suppliers are available.

6. Pressurised Water Header Tank

WARNING:

SCALD HAZARD! NEVER REMOVE THE HEADER TANK CAP IF THE ENGINE IS HOT. STEAM AND HOT COOLANT MAY SPURT OUT AND CAUSE INJURY. TIGHTEN THE HEADER TANK CAP SECURELY AFTER BEING REMOVED. STEAM CAN SPURT OUT DURING ENGINE OPERATION IF THE CAP IS LOOSE.

- The pressurised header tank should be mounted higher than the level of the engine, no less than 300mm, and no more than 1m from the engine, to prevent cooling system air locks.
- Shire 50WM: A single hose connects the tank to the vertical hosetail fitted into the port side of the twin thermostat housing.
- Shire 38, 40, 45 and 50: Two hoses are used on these engines. One is fitted between the smaller internal diameter (3mm) outlet (on the left hand side of the tank) and the connection on the port side of the top of the thermostat housing (on 50 the side of the twin thermostat housing). The second hose is connected between the larger internal diameter outlet on the right hand side of the tank and the ½“ hosetail connection on the engine pipe facing forwards and upwards at 45°. The hoses **MUST** be connected correctly
- The connections for the Header Tank are shown on (**Figure 17**)
- A constant rise on pipework is required to prevent air locks

	Connections on Engine	Connections on Header Tank
Shire 38		
Shire 40,45	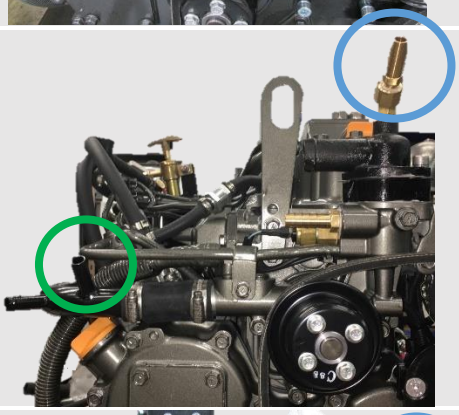	
Shire 50	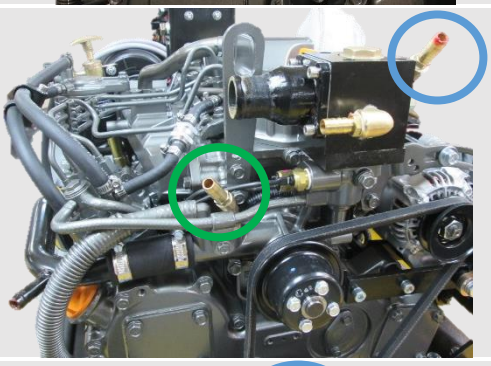	
Shire 50WM	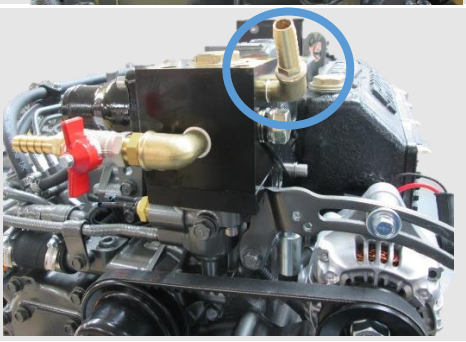	

Figure 17: Header Tank Connections

7. Calorifier

- The temperature of coolant flowing to the calorifier from the engine can be between 85 and 90°C. A blender valve must be incorporated in the calorifier / hot water system outlet to lower the hot water temperature for domestic use.
- The hose connections for the calorifier are for a ½" internal diameter hose.
- The connections for the calorifier are shown on (**Figure 18**)

	Calorifier Connections on Engine
Shire 38	
Shire 40,45	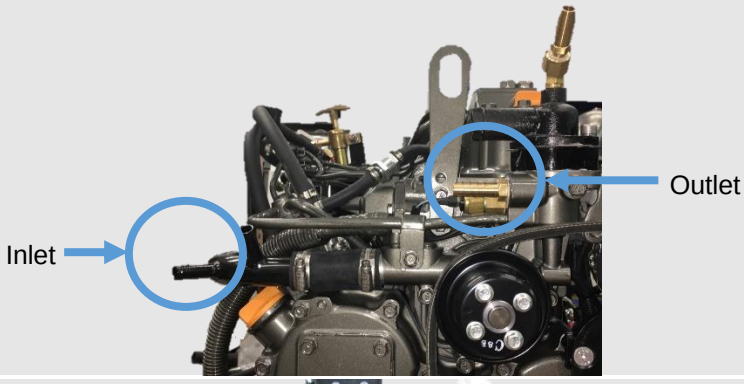
Shire 50	
Shire 50WM	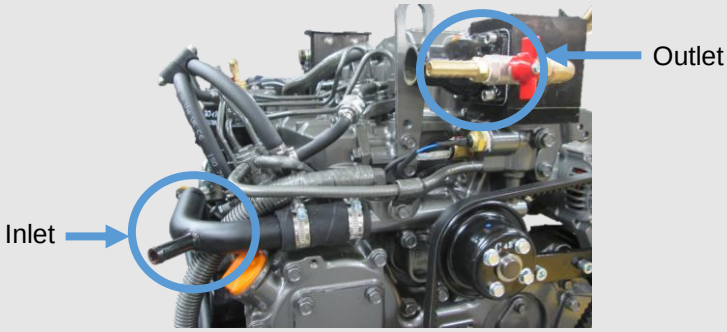

Figure 18: Calorifier Connections

8. Shaft Connection and Propeller Selection

- Some type of flexible coupling must be used to connect the gearbox output flange to the propeller shaft flange.
- Please note, underperforming engines will not be covered under warranty if the cause of the poor performance is found to be the use of an inappropriate propeller.

9. Engine Anti-Vibration Mounts

- Ensure that the engine feet do not end up at the top of the thread on the engine mounts, this puts undue pressure on them and can result in excessive engine movement and premature mount failure. If this is a problem, put steel packing plates under the mounts. Packing plates 25mm thick are available: Order RDG3906 Engine mount spacer. Alternatively, they can be manufactured locally.
- Ensure that the engine has been installed for at least 24 hours before shaft alignment is checked, to allow the mounts time to settle under the engine weight.
- Ensure that the anti-vibration mount centre screw is sufficiently raised so as not to touch the engine bed. If this occurs, excessive engine vibration will be experienced through the hull.
- For best results, fit the front AV mounts into the front holes in the engine rails. If the engine room space is a problem the mounts can be fitted slightly further back in the alternative holes and the front of the rail cut off – leaving 50mm of material to retain strength (measuring from the centre of the mount hole to the front end of the rail). Note: This procedure is only possible on non- 'E' kit engines and may result in a very slight increase in vibration. AV mount installation points are shown on (**Figure 21**)

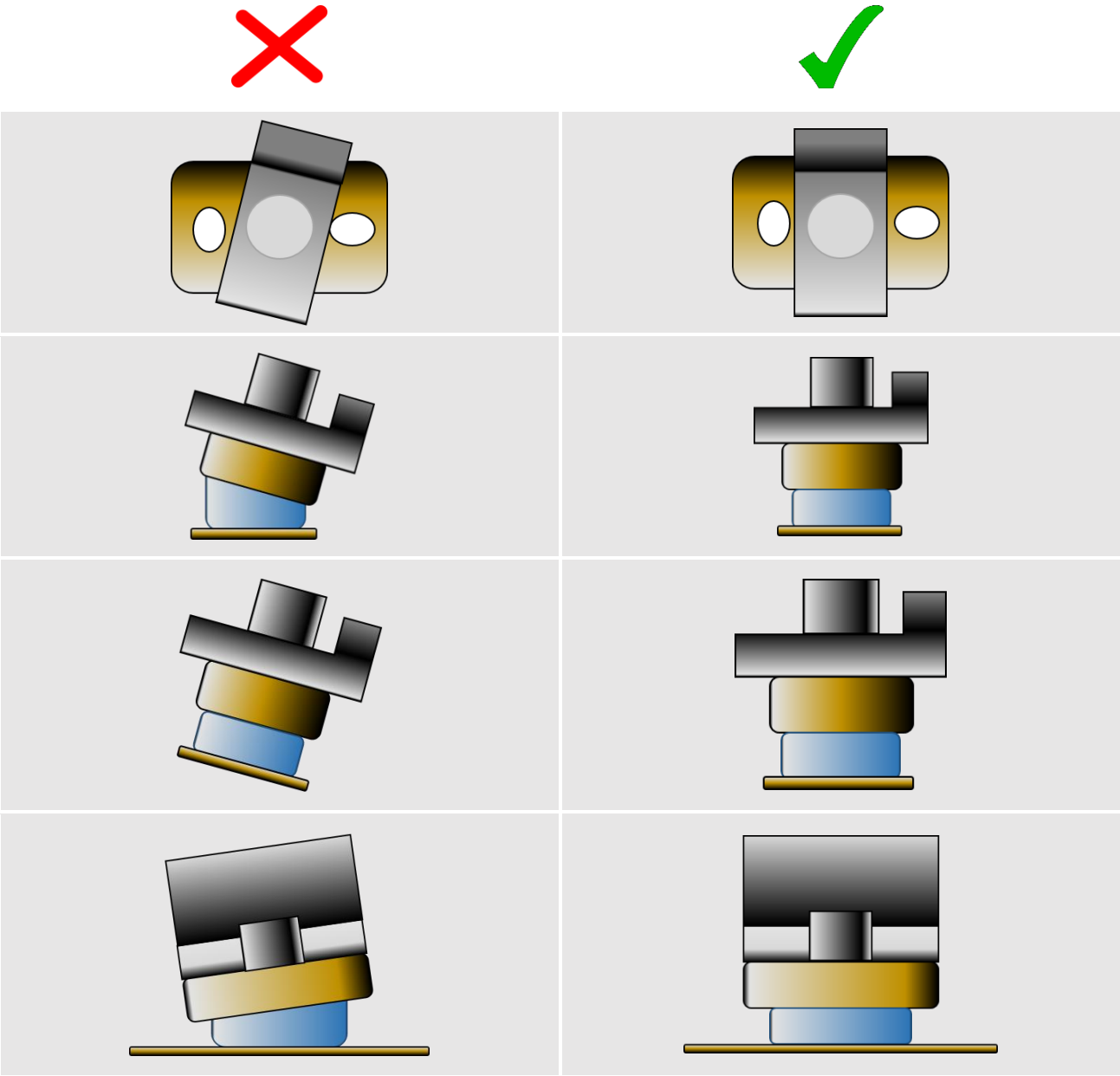

Figure 19: Correct Anti-Vibration Mount Installation

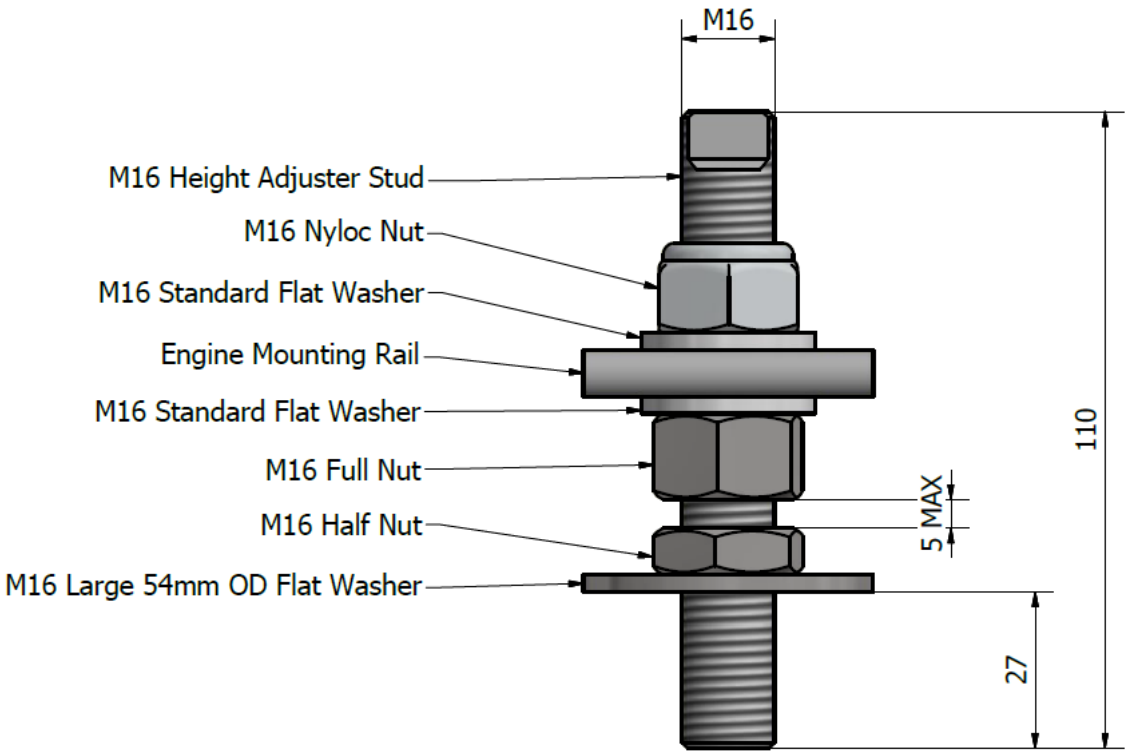

Figure 20: Correct Anti-Vibration Mount Installation

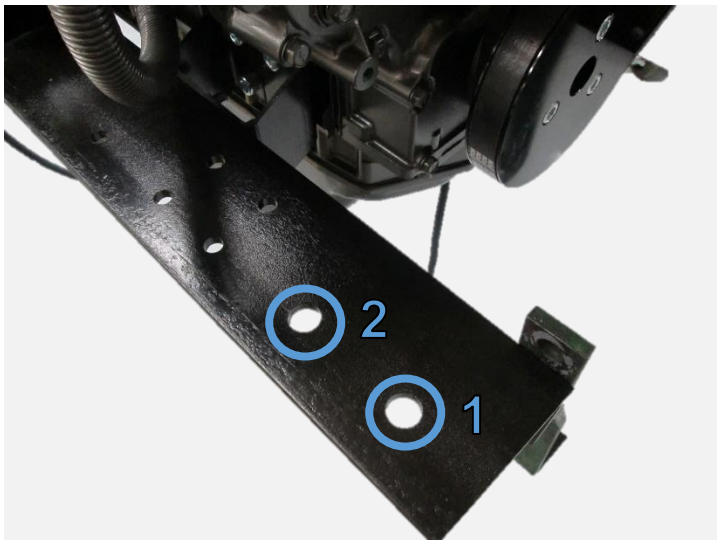

	Description
1	Normal mounting position
2	Alternative mounting position if engine compartment space is restricted

Figure 21: Anti-Vibration Mount Installation Points

10. Engine Alignment

- The gearbox output shaft flange and propeller shaft input flange must be almost

perfectly aligned. A maximum of 0.05mm (0.002”) misalignment in any plane is acceptable. Ensure alignment is rechecked after the first 4 hours of running, after the first month and thereafter annually.

- If the engine is out of alignment it will result in excessive vibration and possible damage to the stern tube and propeller shaft.
- Boats that are fitted with fully flexible drive couplings should still have the engine and shaft alignment as close as possible. A dummy shaft may be required for this purpose.

Some types of flexible shaft couplings require the input and output to be misaligned, check with the coupling manufacturer’s installation instructions.

- Minimum clearance of 25mm between rails and engine beds.

11. Engine Inclination

- The engine installation angle is the angle of the crankshaft centre to the water line (**Figure 22**).
- The propulsion efficiency decreases as the engine installation angle increases.
- The **maximum** engine installation angle is 15°

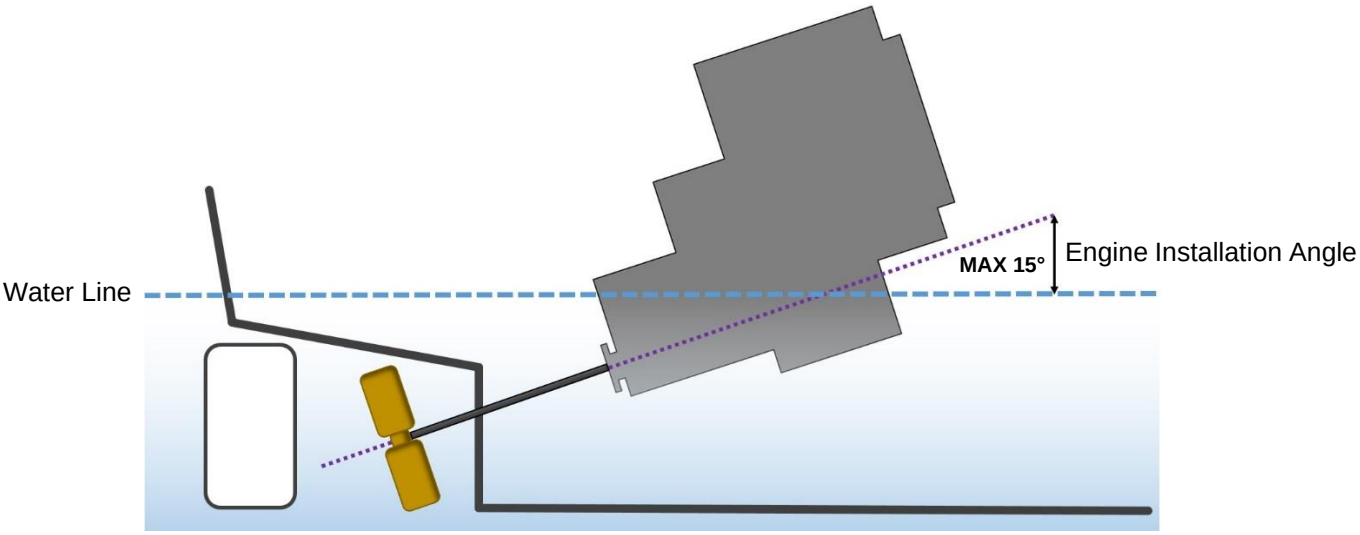

Figure 22: Maximum Engine Installation Angle

12. Electrics

CAUTION

- Do not attach any part, hose or cable to the engine wiring harness. There is a warning label attached to the harness to remind you of this.
- Connect the wiring extension harness multi plug to the panel plug and the other end to the engine.
- Connect the start battery positive cable to the engine starter motor solenoid terminal.
- The starter motor battery cable must have a cross sectional area of at least 50mm^2.
- For twin alternator engines, connect the domestic battery positive cable to the 125A, 150A or 240A Alternator. The 125A and 150A alternator have a B+ terminal and the 240A alternator has a “pos out” terminal (see wiring diagram). This ensures that the 50A alternator charges the start battery and the 125A/150A or 240A alternator charges the domestic battery. This removes the requirement for a split charging system or relay.
- The engine is supplied with the domestic alternator belt not fitted. This is so that domestic alternator damage does not occur if the engine is run without the domestic battery back connected. The belt should only be fitted when the domestic battery bank has been connected to the domestic alternator. Belt fitting and tensioning instructions are in **Section 7 – Service Procedure**. Make sure the alignment is correct.
- A cable will need to be manufactured locally and fitted between either the lower 12V 125A, 12V 150A, 12V 240A or 24V 120A alternator and the domestic battery positive terminal. The cable should have a minimum cross-sectional area of:

	Cross Sectional Area
Shire 38 & 40	40mm²
Shire 45 & 50	70mm²
24v 120amp Alternator	40mm²

- Both negative battery terminals can be connected to a common earth point.

Note: The 240A alternator is of the insulated earth design and requires a heavy-duty earth cable installed at all times.

Note: If an optional larger output alternator is fitted to either a new engine, or fitted to an old engine as an upgrade, ensure that all cables, master switches, terminals, split charge relays etc. are of sufficient capacity for the increased current.

13. Electrical Options

DANGER:

ELECTRIC SHOCK RISK!

- If the engine is fitted with the optional 230V ‘E’ Kit System, refer to the manual supplied with it for correct wiring, control box installation and operation.

- The Shire range can be supplied with other optional additional 12V, 24V or 48V alternators. This will be supplied fitted but not wired. It is the responsibility of the boat builder to ensure that this is correctly wired to the boats electrical system.

14. Engine Oil

WARNING:

BURN HAZARD! WAIT UNTIL THE ENGINE COOLS BEFORE YOU DRAIN THE ENGINE OIL. HOT ENGINE OIL MAY SPLASH AND BURN YOU.

NOTICE:

ENGINE OIL WITH A HIGHER API CLASS THAN CD IS UNSUITABLE FOR CANAL BOAT OPERATION AND WILL CAUSE ENGINE DAMAGE IF USED.

- All Shire engines are supplied fully run in.
- Check oil levels in engine and gearbox before starting.
- Use good quality engine oil SAE 10W / 40 API class CD.

15. Fuel

WARNING:

DIESEL FUEL IS FLAMMABLE AND EXPLOSIVE UNDER CERTAIN CONDITIONS.

WARNING:

DIESEL FUEL IS HARMFUL TO SKIN. MAKE SURE THE RELEVANT PERSONAL PROTECTION EQUIPMENT IS WORN.

- Ensure the main fuel tank is clear of dirt and water.
- A separate water trap must be fitted to all engine installations. The Shire 40, 45 and 50 engines are supplied with an additional fuel pre-filter water trap as standard.

- Connect fuel feed return hoses from engine to main supply and return lines to main fuel tank, ensuring they are connected the correct way around. The hose to the electric fuel pump is the inlet.
- The engine hoses are supplied with 8mm (5/16”) OD metal hosetails and should be securely fitted to the main supply and return pipes with compression fittings.
- The engine hoses should have sufficient slack to absorb engine movement without placing strain on the hoses and be securely clipped to prevent accidental damage and chafing.
- Initially fill the fuel system by turning the ignition on to operate the electric fuel pump. Loosen the bleed screw on the top of the primary fuel filter / water trap and close when fuel begins to flow clearly (no bubbles). The rest of the process is done automatically by the engine. It is rarely necessary to bleed the injection pump or injectors upon installation as the engine will already have fuel in it from the engine run in and test procedure.

NOTICE:

THE PART CIRCLED IN Figure 23 IS NOT A BLEED SCREW. ATTEMPTS TO UNDO OR REMOVE IT WILL CAUSE DAMAGE TO THE PART.

Figure 23: Secondary Fuel Filter Head

16. Coolant

WARNING:

SCALD HAZARD! NEVER REMOVE THE COOLANT BOTTLE CAP IF THE ENGINE IS HOT. STEAM AND HOT COOLANT WILL SPURT OUT AND CAUSE INJURY. TIGHTEN THE CAP SECURELY AFTER BEING REMOVED. STEAM MAY SPURT OUT DURING ENGINE OPERATION IF THE CAP IS LOOSE.

WARNING:

BURN HAZARD! WAIT UNTIL THE ENGINE COOLS BEFORE YOU DRAIN THE ENGINE COOLANT. HOT ENGINE COOLANT MAY SPLASH AND BURN YOU.

WARNING:

BURN HAZARD! THE WATER COOLED EXHAUST MANIFOLD IS HOT AND MAY BURN YOU.

- Prepare coolant mix of 50% clean tap water and 50% antifreeze.
- Open the calorifier taps (if fitted) to fill the calorifier system and displace air.
- To fill the cooling system for the first time, fill the boat skin via the inlet hose connection or filler plug if fitted.
- Shire 38,40 & 45: Fill the engine through the white plastic expansion tank.
- Shire 50: Fill the engine through the twin thermostat housing filler, then top up the white plastic expansion tank.
- Shire 50WM: Fill the engine through the water-cooled exhaust manifold filler, then through the twin thermostat housing. Top up through the white plastic expansion tank.
- Bleed skin tank.

After running the engine for the first time, stop the engine and monitor the water level frequently as trapped air bubbles may be expelled. Top up the system as necessary.

17. Control Cables

- Connect engine speed control cable. With the engine off, ensure that the engine speed control lever achieves full travel from idle to full speed. Adjust if necessary.
- Check the gearbox shift lever selects positively and that the drive direction corresponds with the gearshift control lever. Ensure that the gearbox control lever and the gearshift lever are both in neutral before connection. Adjust if necessary.

18. Domestic Battery Bank

DANGER:

EXPLOSION HAZARD! NEVER SHORT OUT THE BATTERY TERMINALS, INCLUDING WHEN CHECKING THE REMAINING BATTERY CHARGE THIS WILL RESULT IN A SPARK AND MAY CAUSE AN EXPLOSION OR FIRE.

WARNING:

BURN HAZARD! BATTERIES CONTAIN SULPHURIC ACID. NEVER ALLOW BATTERY FLUID TO COME IN CONTACT WITH SKIN, EYES OR CLOTHING. SEVERE BURNS COULD RESULT. MAKE SURE THE CORRECT PERSONAL PROTECTION EQUIPMENT IS WORN.

Domestic battery banks that are too large create excessive loads on the domestic alternator. Alternators running at maximum output for prolonged periods of time will eventually fail prematurely; alternators that fail due to the battery bank being over the maximum recommended size will not be covered by warranty.
Higher output additional alternators, or ‘E’ kits are available: if larger battery banks are required discuss your individual power requirements with the boat builder or engine supplier.

- The maximum domestic battery bank is calculated using the following:
    - Live aboard, three times domestic alternator, maximum output current.
    - Weekend cruising or hire fleet use, three and a half times domestic alternator, maximum output current.

Example 1:
Live aboard application fitted with a 150amp domestic alternator
3 x 150 = 450 ampere/hour maximum battery bank size

Example 2:
Weekend cruising or hire fleet application fitted with a 240amp domestic alternator
3.5 x 240 = 840 ampere/hour maximum battery bank size.

The standard alternators fitted to Shire engines are not suitable for charging lithium-ion batteries. If the standard alternators are used for charging lithium-ion batteries, they will not be covered under warranty. If lithium-ion batteries are to be used a specialist alternator will be required.

19. Control Panel

CAUTION

All Shire engines are supplied with an engine control panel that shows RPM and hours run and include warning lights and a warning buzzer. The deluxe panels also have additional gauges for the water temp, oil pressure and battery charging. The panels are designed to be splash proof and are correctly installed with the gauges vertical. Do not install so that they remain out in the open, or cover up when not on use.
The control panel engine tachometer is supplied already calibrated to measure correct engine speed. If a new control panel, tachometer or alternative alternator is fitted, the tacho will require re-calibrating.
Control Panel Calibration Procedure:

- Connect control panel plug to engine wiring loom plug.
- Turn ignition on (do not start engine).
- Press and hold black button on rear of tacho until “H-“appears on the digital display at the bottom of the tacho (on the front).
- When pressing and holding the black button on rear of tacho, the value displayed will increase / decrease until the button is released. Then when pressing again it will increase / decrease in the other direction. Keep doing this until the digitally displayed value on the bottom of tacho reaches the correct value, according to the type of alternator (see below table). This must be set to the alternator with blue and black

wire connected to it.

- Confirm settings to tacho meter reader.
- An optical tachometer is required to check the reading.

Barrus Alternator (Amps)	Barrus Tacho reading
50	10.50 – 11.00
70	15.00
125	-
150	19.50 – 20.00
240	22.00

Alternative or non-standard alternators will require calibrating and checking by trial and error, with a handheld tacho until the engine speed and indicated tachometer speed are the same. For the majority of the engines, the tacho is driven by the 50A alternator.
Engine energise to stop systems are available as an optional extra.

20. Exhaust System

WARNING:

EXHAUST HAZARD! NEVER OPERATE ENGINE WITHOUT PROPER VENTILATION. NEVER BLOCK VENTS OR OTHER MEANS OF VENTILATION. ALL COMBUSTION ENGINES CREATE CARBON MONOXIDE GAS DURING OPERATION. ACCUMULATION OF THIS GAS COULD CAUSE ILLNESS OR EVEN DEATH.

The exhaust outlet size on the engine is 1½” BSP female. There must be a flexible exhaust hose of suitable exhaust grade between the engine and the silencer or hull outlet. The outlet must be above the waterline at all times. The exhaust fittings and silencer (if fitted) must not be smaller than 1½” BSP. Exhaust silencers, flexible exhaust hose connections and lagging blanket are all available as optional extras:

Part Description	Part Number
Exhaust Coupling 1½” x 1½” BSP	RDG1916
Exhaust Silencer DSA-38	RDG1911
Flexible Exhaust Hose (18”)	RDG1879
Blanket 18” Flexy Exhaust	RDG2477
Hospital Silencer 1½“ BSP	RDG6536
1 ½”F x 1 ½”F BSP 90 Elbow	RDG5898

Make sure the exhaust increases then decreases in height as shown in (**Figure 24**).

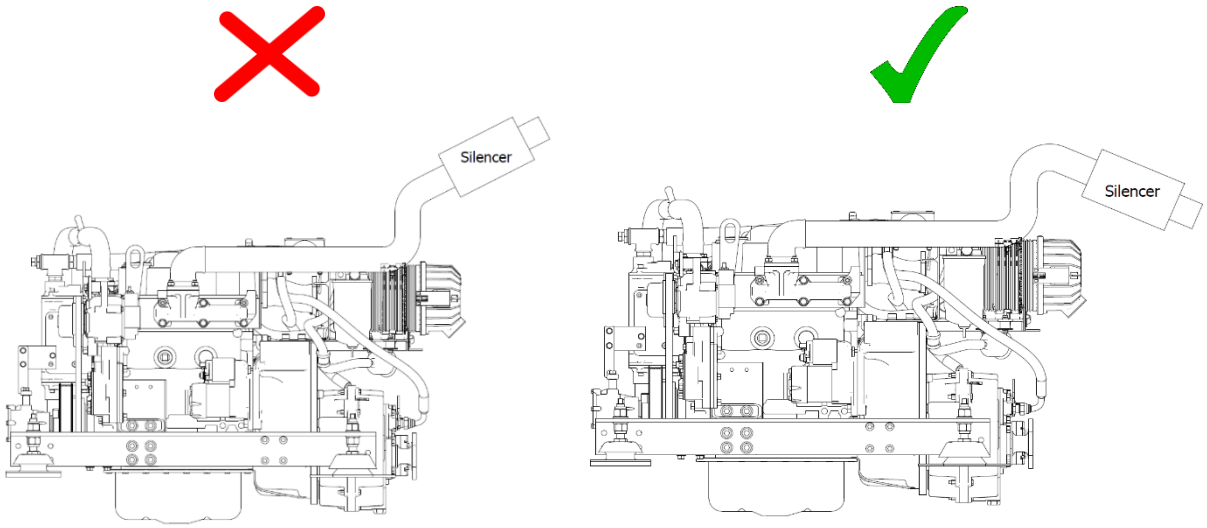

Figure 24: Correct Exhaust Installation

21. Hydraulic Drive Transmissions

If an engine is to have a hydraulic drive transmission attached to it instead of a conventional marine gearbox, a number of points must be observed.

- Bobtail engines (i.e. Engines supplied without a marine gearbox) normally do not have a gearbox oil cooler fitted however if a cooler is supplied, this will only be suitable to cool a conventional marine gearbox.
- Hydraulic drive transmissions generate far more heat than a conventional marine gearbox. Therefore the size of the oil cooler installed must be calculated by the hydraulic drive transmission supplier. This is to ensure it has sufficient cooling capacity and is sized appropriately taking into account:
  - Maximum engine power.
  - High ambient summer air temperature.
  - Summer River/Canal/Sea temperature.
  - No additional restriction to engine coolant flow is present.

Skin tanks will also need to be increased by up to approx. 10% to dissipate the additional heat generated, when a hydraulic drive system or hydraulic bow thruster is used.

<u>Or</u>

An additional separate skin tank of suitable capacity with separate water circulating pump will need to be fitted for a hydraulic drive transmission.

Hydraulic oil coolers should be installed after the engine, not before. Coolers that are installed before the engine will invalidate the engine warranty.

22. Hydraulic Pump Drive Option (Shire 38, 40, 45, 50)

For SAE pump (9T)

If a hydraulic pump is required to drive items such as bow thrusters or hydraulic winches, then the following parts are required to enable drive to be taken from the engine power take off:

Part No 129484-26200 incorporates:

- Packing (on gear case side): 171353-26081
- Cover: 121023-26070
- Cover packing: 121023-26061

Ratio: 0.90:1

23. Centa Coupling CF-M-160 (RDG2779)

Centa have given Barrus permission to use the following instruction on how to fit the coupling: When assembling the coupling all the bolts and nuts must be tightened to the correct torque using a torque wrench. Tightening by “feel” will not give a satisfactory result.

- Remove the clamping bush from the coupling.
- Degrease the propeller shaft and the bore of the clamping hub. Leave the special grease only in the tapered bore of the coupling hub, and on the outside of the clamping hub. **DO NOT USE SOLVENTS.**
- Mount the coupling onto the gearbox output flange. Note: The M10 tapped holes in the coupling are 15/17mm, so care must be taken to use screws or studs of the correct length. Centa recommend the use of M10 x 25 screws or M10 x 40 studs. If using studs, the shorter (10mm) screwed portion should be inserted into the coupling. **TIGHTENING TORQUE IS 45Nm**
- Push the clamping hub fully onto propeller shaft.
- Connect the clamping hub/propeller shaft onto the coupling. The connecting screws of the clamping bush must be tightened alternately in several steps until the required tightening torque is reached. Finally, the tightening torque of all fasteners must be checked all round. **TIGHTENING TORQUE (M12x40) is 79Nm.**

The tightening of the connecting screws between the clamping bush and the hub means that the clamping hub/propeller shaft will be dragged into the coupling by a few millimetres, thereby effectively shortening the installation length. Sufficient free space (minimum 10mm) should be available between the outer bearing and the propeller hub.

The propeller-thrust (or propeller-pull in reverse drive) is safely transmitted via the coupling from the propeller shaft to the gearbox, but the design of the coupling is such that the rubber must be compressed when sailing in the forward direction. The coupling is not suitable for use with vee-drive gearboxes having outputs of the quill-shaft arrangement where the coupling would be subject to a pulling force when sailing forward.

The coupling uses a bonded rubber element, and care should be taken not to contaminate the rubber by indiscriminate use of solvents or anaerobic liquids.

24. PRM 280DP Gearbox with Power Take Off (Option)

The PRM 280 with power take off is designed for driving hydraulic pumps made to SAEJ77 Series B specification. The maximum power which can be transmitted is 22kW (29.5hp) per 1000rpm.

The power take off operates in the opposite direction to the gearbox input shaft. The output of the live power take off is the same speed as the engine.

25. Installation Check List

	Please tick box ✔
Engine alignment correct, clearance all round, check propeller turns by hand (Ensure ignition is off battery and battery master switch is off)	
Anti-Vibration mounts correct height, spacers if necessary. Make sure all nuts are tight	
Exhaust system as specified	
Battery leads are of correct size, tightened and start battery is charged	
Check tension of alternator belts, wiring connected and belt alignment checked if removed	
Check fuel system is connected correctly and primed	
Fuel line water trap installed and water drained off	
Check header tank and skin tank connections are correct way round, constant pipework rise to header tank	
Check level of coolant in header tank and correct ratio of antifreeze to water	
All air has been bled from skin tank, calorifier and pipework	
Engine and gearbox oil levels are as specified	

Throttle and gear cables correctly adjusted and operating smoothly	
All pipework and cabling supported and not chaffing, slack to allow movement of engine	
Engine control panel installed in a position where it is not out in the open	
Confirm engine control panel, gauges and warning lights are all operational	
Run the engine for 20 minutes with the boat tied up and in gear (at ½ speed).	
Check & Set the Engine Idle Speed to 850-875 rpm	
Check for leaks	
Explain/Demonstrate daily/weekly/periodic maintenance checks	
Explain/Demonstrate off season storage and maintenance	
230v AC systems installed by qualified electrician and to BMEA code of practice for Electrical and Electronic installation in Boats: BS EN ISO 13297 (ac)	
Installer's signature	
Installer name/company	

SECTION 6 – Operation

NOTICE:

REFER TO THE YANMAR MANUAL PRIOR TO STARTING THE ENGINE.

1. Starting the engine for the first time

- Remove ignition key.
- Ensure all oil and coolant levels are checked.
- Ensure both the engine and domestic batteries are connected. Both battery master switches must be turned on. Failure to do so may damage the domestic alternator.

2. Starting Procedure

- Ensure there is no one in the engine compartment.
- Ensure the engine compartment door is closed.
- Ensure the gearshift control level is set to neutral and that all persons are clear of any moving parts.
- Insert ignition key.
- Turn key to on position. The glow plug light will illuminate.
- Observe warning lights (and gauges on deluxe panel). Note: The engine water temperature overheat warning light will only come on for a brief period of time when the ignition is first turned on as a bulb check. It will then only illuminate in the case of the engine coolant temperature exceeding the maximum safety level.
- Wait for the glow plug light to go out.
- Turn key to start and hold to crank.
- Crank the engine for no more than 15 seconds.
- Upon engine start, immediately release the key.
- Key will return to on position.
- The warning buzzer will stop and on the deluxe panel, the oil pressure gauge will show an oil pressure of 3.5 - 4.5 bar (51 – 61 psi).
- Should any warning light not go out, or if there is no reading on the oil pressure gauge, the buzzer will continue sounding. In this case, stop the engine immediately and check the relevant system (Note: If the charge light does not go out, briefly increase the engine speed).
- Stop engine if any abnormal noises are detected.
- Visually check the engine for oil, fuel and coolant leaks, after initial start-up and at regular intervals. Note: Engine must be stopped, with ignition key removed, to carry

out this check.

3. Stopping Procedure

- Move speed control lever to idle position.
- Turn key to off position.

4. Full Load Running

- Running diesel engines near their rated output (maximum load) regularly will disperse accumulated carbon and condensation, enhancing engine life and reducing emissions.
- Running the engine at, or near maximum speed whilst in gear may not be possible on inland waterways with speed limits in place. This will have to be carried out whilst moored up. Ensure that the mooring ropes and posts are strong enough to allow this and that the water is deep enough not to damage the propeller. It is recommended that the engine is run at or near full load for 15 minutes (maximum revs, in gear) every 50 hours.

5. Refuelling

WARNING:

DIESEL FUEL IS FLAMMABLE AND EXPLOSIVE UNDER CERTAIN CONDITIONS.

WARNING:

DIESEL FUEL IS HARMFUL TO SKIN. MAKE SURE THE RELEVANT PERSONAL PROTECTION EQUIPMENT IS WORN.

- All Shire canal boat engines run on diesel fuel.
- Please note that when the vessel is to be left for any period of time, the fuel tank should be left full to eliminate the build-up of condensation and formation of water in the fuel tank.
- Engine to be turned off while refuelling.
- The use of renewable and alternative fuels that comply with the EN15940 standard is permitted.
- This refers to GTL (Gas to Liquid), BTL (Biomass to Liquid) and HVO (Hydrotreated Vegetable Oil) fuels.

- If an alternative fuel that does not comply with EN15940 is used, problems such as seizure of the fuel injection pump may occur due to deterioration of fuel lubricity. This will NOT be covered by warranty.
- Alternative fuels that comply with EN15940 have lower density and lower calorific values per unit capacity than those of ordinary diesel fuels, thus it is expected that the engine output will decrease.

6. Twin Thermostats – Shire 50 and 50WM

WARNING:

SCALD HAZARD! NEVER REMOVE THE TWIN THERMOSTAT CAP IF THE ENGINE IS HOT. STEAM AND HOT WATER MAY SPURT OUT AND SERIOUSLY BURN YOU. TIGHTEN THE TWIN THERMOSTAT CAP SECURELY AFTER BEING REMOVED. STEAM CAN SPURT OUT DURING ENGINE OPERATION IF THE CAP IS LOOSE.

WARNING:

BURN HAZARD! THE TWIN THERMOSTAT HOUSING IS HOT AND MAY BURN YOU.

The twin thermostat design is a feature unique to some of the Shire canal boat engine range. It ensures that the engine warms up very quickly due to the first thermostat being closed so that cooling water is routed through the specially designed cast iron exhaust manifold (Shire 50WM only). The waste heat from the exhaust is recycled to bring the engine up to operating temperature even quicker than normal. This ensures efficient engine operation with reduced fuel consumption and even cleaner exhaust emissions. It also helps in keeping engine wear to a minimum. **Figure 25** shows the operation of the cooling system. Note: Shire 38, 40 and 45 have a single thermostat only.

With the engine quickly up to operating temperature, the first 71° thermostat opens. The water now flows to the domestic hot water tank, resulting in hot water being rapidly available.	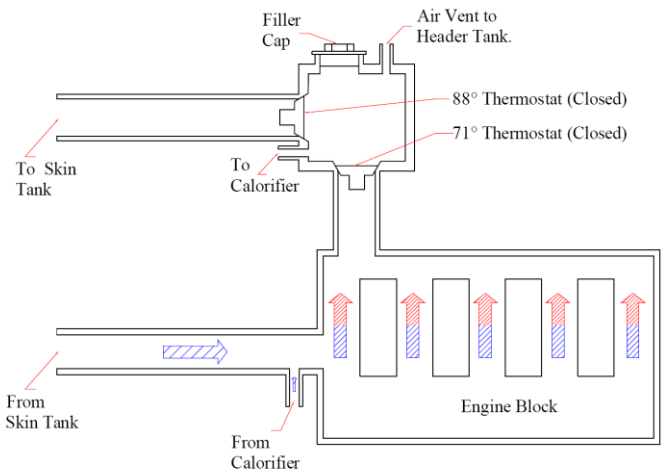
When the water stored in the hot water tank has reached full temperature, the second 88° thermostat opens and water can then flow to the skin tank and correctly control engine cooling. The exhaust manifold that earlier helped to heat engine water is now cooled to ensure safe operation and reduce engine compartment temperatures.	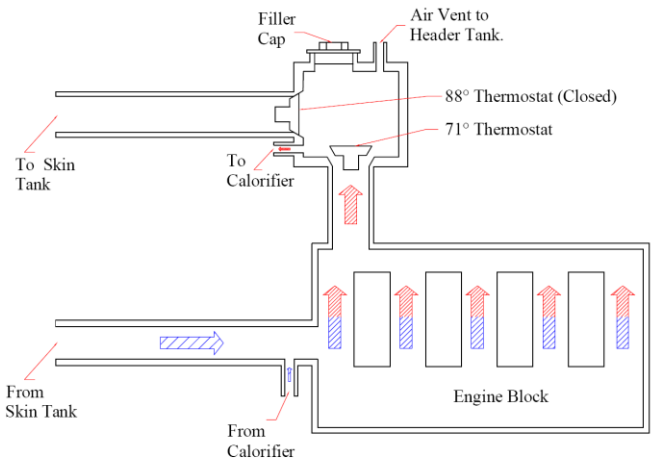
If the load on the engine reduces and the demand for domestic hot water increases, then the system will automatically compensate and re-direct water to ensure that a plentiful supply of hot water is always available.	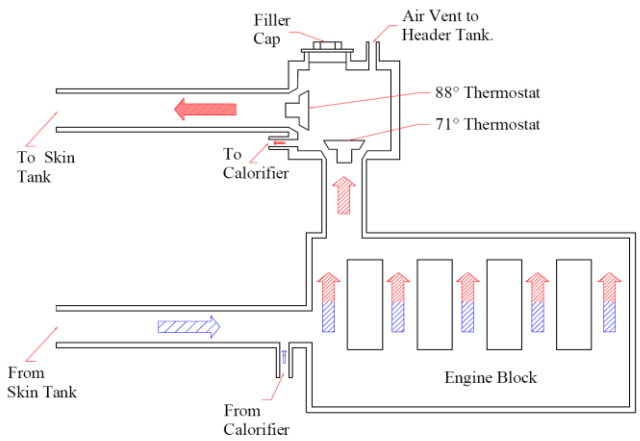

Figure 25: Twin Thermostat Operation

7. Diesel Fuel Additive

The use of diesel fuel additive is recommended on Shire engines. The quality of the fuel available when cruising is often unknown. Also, the fuel may have been in storage for long periods of time. The use of additives will ensure that your engine fuel injection system is in top condition which should result in many years of smooth reliable operation, without the cost and inconvenience of expensive breakdowns due to poor quality fuel. It has also been found that improvements in fuel consumption and start ability are an added benefit of using this product. Diesel fuel additive is available from your Shire dealer in a handy 500ml container, Part Number RDG80210219.

8. Exhaust Back Pressure

The back pressure falls within the manufacturers recommended range when using the optional exhaust system (see **20. Exhaust System** from **Section 5 – Installation**) with the engine.

9. Hybrid System (For engine with Hybrid System fitted)

Refer to the separate Hybrid Operation Manual for more details on the system.

10. Single Shift Control Lever Side Mount Operation - Optional (RDG9210055)

To engage forward or reverse gear:

- Lift the safety latch under the handle before shifting.

To rev the engine in neutral:

- Pull the lever out sideways from the main body.
- Lift the safety latch under the handle then shift.

SECTION 7 – Service Procedure

NOTICE:

REFER TO THE YANMAR MANUAL PRIOR TO CARRYING OUT ANY SERVICE OR MAINTENANCE WORK.

WARNING:

PRIOR TO CARRYING OUT ANY SERVICE OR MAINTENANCE WORK MAKE SURE THE RELEVANT PERSONAL PROTECTION EQUIPMENT IS WORN.

1. Engine Oil and Filter Change

WARNING:

BURN HAZARD! WAIT UNTIL THE ENGINE COOLS SLIGHTLY BEFORE YOU DRAIN THE ENGINE OIL. HOT ENGINE OIL MAY SPLASH AND BURN YOU.

- Change the engine oil while the engine is still warm.
- Remove the blanking plug in the sump pump spout (6mm Allen key). Note: Shire 50 has two oil drain pumps, it is the pump mounted up higher on the engine.
- Place a plastic tube over the spout and into a container. Operate the pump handle to empty the sump. Note: Remember to refit the blanking plug afterwards.
- Place a drip tray under the engine to catch the small amount of oil that will escape from the oil filter. Using the strap type oil filter removal tool supplied with the engine, slacken the filter from the engine block in an anti-clockwise direction. Remove the tool and spin off the filter.
- Lightly oil the new filter O ring seal and install the filter onto the engine. Spin it on in a clockwise direction and finally tighten by hand only as firmly as you can.
- Refill the sump using the yellow oil filler cap in the rocker cover on top of the engine.
- Oil level should be to the top mark on the dipstick.
- Run the engine for 5 minutes before checking the oil level with the dipstick and top up if required.
- Do not exceed the maximum oil level marker as this may cause damage to the internal

components of the engine.

2. Air Filter Check and Change

- Release the two spring clips. Pull off the end cover to reveal the filter element. The element simply pulls out.
- To fit the new element, slide the open end of the filter element into the main body. Gently push the element until fully seated. Refit the end cover.
- The air filter is constructed from pleated paper. Inspect it closely for dust or dirt. The air filter cannot be cleaned and must be replaced when dirty. The engine requires clean unrestricted air to run efficiently. Failure to maintain the air filter could result in smoke, increased fuel consumption and ultimately engine damage.

3. Gearbox Oil Change

WARNING:

BURN HAZARD! WAIT UNTIL THE GEARBOX COOLS SLIGHTLY BEFORE YOU DRAIN THE GEARBOX OIL. HOT OIL MAY SPLASH AND BURN YOU.

Some engines will have a gearbox sump pump fitted. To change the oil in this circumstance, follow the same procedures as were outlined for changing the engine oil. For engines without a gearbox sump pump follow the procedure below.

- Change the gearbox oil while it is still warm (Please refer to the gearbox manual for more information).
- Place a tray beneath the gearbox that will hold at least 2 litres.
- Remove the drain plug and allow 5 minutes for the oil to drain thoroughly.
- Replace the drain plug. Ensure that the sealing washer (if used) is still in place and in good condition before tightening. Fit a new washer if required.
- Refill the gearbox with oil to the upper mark on the dipstick. Screw the dipstick in fully, to establish level. Refer to the PRM owner manual for more details. **Section 6** in this manual contains details of oil specifications.
- Do not overfill the gearbox as this can damage the internal components.

Gearbox Model	Location of Dipstick / Filler Plug / Drain Plug
PRM 90 / 125	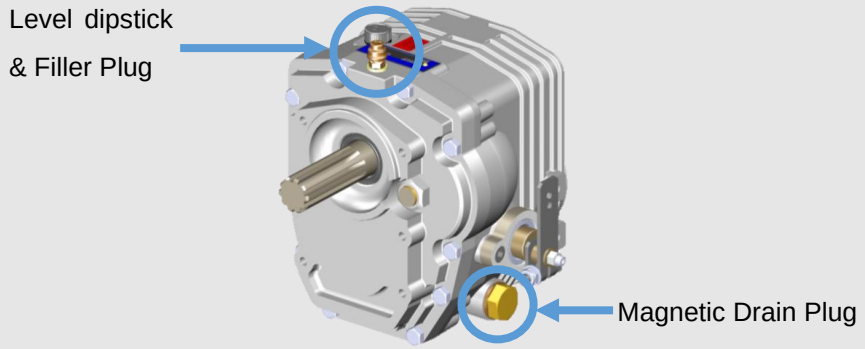
PRM 150	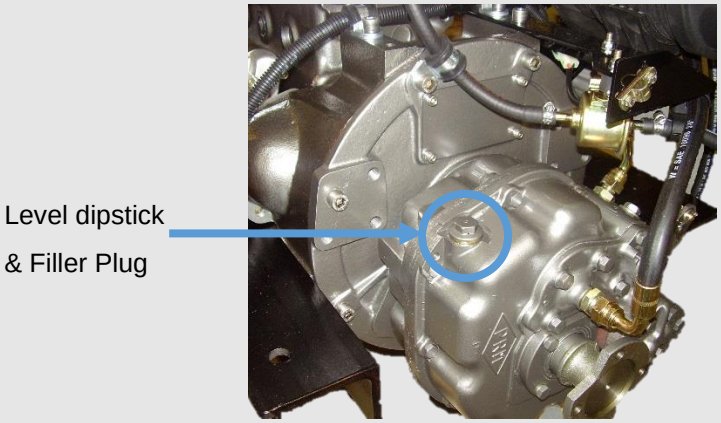
PRM 280	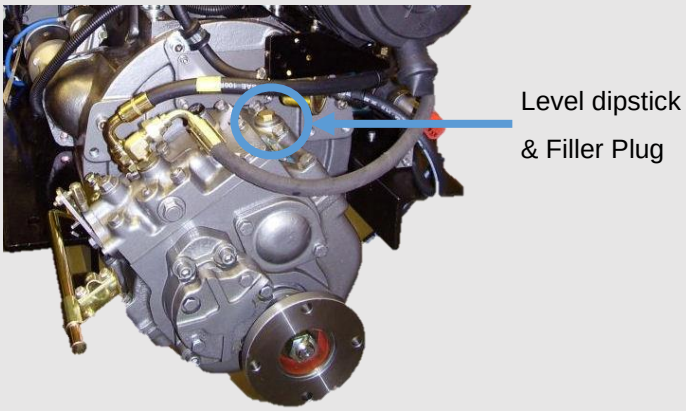

Figure 26: Location of Dipstick / Filler Plug / Drain Plug on Gearbox

4. Disposal of Oil and Related Items

NOTICE:

ALWAYS BE ENVIRONMENTALLY RESPONSIBLE.

- Please dispose of used oil and oil filters safely with due regard for the environment and take to your local waste oil disposal point.

- Do not allow oil or contaminated parts to enter the inland water way system.

5. Primary Fuel Filter Drain – Shire 40, 45 & 50

WARNING:

DIESEL FUEL IS FLAMMABLE AND EXPLOSIVE UNDER CERTAIN CONDITIONS.

WARNING:

DIESEL FUEL IS HARMFUL TO SKIN. MAKE SURE THE RELEVANT PERSONAL PROTECTION EQUIPMENT IS WORN.

Note: The Shire 38 is not fitted with a primary fuel filter / water trap.

- Place a small drain bowl under the primary fuel filter / water trap.
- Loosen the drain screw located in the bottom of the fuel filter / water trap (**Figure 27**)
- Drain off any water.
- Once the water has been drained, retighten the drain screw.
- It is unlikely the complete fuel system will require bleeding.
- Run for 5 minutes.
- Check that the drain union is tight and that there are no leaks.
- Do not over tighten the drain screw.

The boat builder should have fitted an additional water trap in the fuel system. Ensure that this is drained regularly.

Figure 27: Primary Fuel Filter Drain Screw

6. Primary and Secondary Fuel Filter Change

DANGER:

DIESEL FUEL IS FLAMMABLE AND EXPLOSIVE UNDER CERTAIN CONDITIONS.

WARNING:

DIESEL FUEL IS HARMFUL TO SKIN. MAKE SURE THE RELEVANT PERSONAL PROTECTION EQUIPMENT IS WORN.

- Ensure the fuel tank is at least ¾ full prior to undertaking this procedure.
- Turn off the main boat fuel supply tap. This is located on or near the fuel tank.
- Place a small drip tray under the filter body.
- Remove the fuel filters using the filter strap wrench supplied. Unscrew them until loose then remove by hand.
- Primary fuel filter only: Retain the metal fuel filter drain screw from the old filter and reuse in the new filter (Shire 40, 45 and 50 only). The part number for the drain screw is RDG9189022.
- Smear a small amount of clean fuel on all of the O ring seals that are supplied with the new filter element.
- Screw the new element back into the filter head. Tighten by hand only.
- Turn the main boat fuel supply tap back on.
- Ensure the system is correctly bled before attempting to start up.

The same procedure is used for both the primary and secondary fuel filter changes.

7. Fuel System Bleeding

DANGER:

DIESEL FUEL IS FLAMMABLE AND EXPLOSIVE UNDER CERTAIN CONDITIONS.

WARNING:

DIESEL FUEL IS HARMFUL TO SKIN. MAKE SURE THE RELEVANT PERSONAL PROTECTION EQUIPMENT IS WORN.

- Ensure the fuel tank is at least ¾ full prior to undertaking this procedure.
- See the fuel paragraph in Section 3 of the Yanmar engine operation manual.

8. Cooling System

DANGER:

SCALD HAZARD! NEVER REMOVE THE COOLANT PRESSURE CAP IF THE ENGINE IS HOT. STEAM AND HOT COOLANT WILL SPURT OUT AND SERIOUSLY BURN YOU. TIGHTEN THE CAP SECURELY AFTER BEING REMOVED. STEAM CAN SPURT OUT DURING ENGINE OPERATION IF THE CAP IS LOOSE.

WARNING:

BURN HAZARD! WAIT UNTIL THE ENGINE COOLS BEFORE YOU DRAIN THE ENGINE COOLANT. HOT ENGINE COOLANT MAY SPLASH AND BURN YOU.

- To check the coolant level, ensure that the engine has been shut down for at least half an hour.
- The coolant level can be checked visually and should be between the two level marks formed on the front of the white plastic expansion tank.
- If required, top up the level with coolant (50% clean tap water and 50% ethylene glycol based anti-freeze) through the expansion tank filler cap.
- Do not use water only to top up as this weakens the coolant mix, reducing the level of frost protection and anti-corrosion protection of the coolant.

9. Belt Adjustment

WARNING:

SEVERE HAZARD! KEEP HANDS AND OTHER BODY PARTS AWAY FROM MOVING/ROTATING PARTS. WEAR TIGHT FITTING CLOTHING AND KEEP YOUR HAIR SHORT OR TIE BACK. REMOVE ALL JEWELLERY BEFORE COMMENCING WORK. CHECK BEFORE STARTING THE ENGINE THAT ANY TOOLS OR RAGS USED DURING MAINTENANCE HAVE BEEN REMOVED FROM THE AREA.

Shire 38, 40 & 45:

- Ensure the ignition key is removed before carrying out any adjustments.
- Turn the battery master switch to the off position before carrying out any adjustments.
- Depress the longest run of the drive belt to be checked. If the travel exceeds 15-20mm using hard finger pressure, the belt needs re-tensioning.
- Loosen the upper adjuster on the alternator. Loosen the lower mounting pivot nut and bolt. Pull out either using hand pressure or using the tensioning screw, depending on which alternator belt is to be tensioned.
- Pull the alternator away from the engine to tighten the belt.
- Hold the alternator in position and retighten all the bolts.

Standard Self Adjusting Belt Tensioner (Shire 50 & 50WM only):

- The domestic alternator (240A) can have an automatic belt tensioning pulley fitted. No adjustment of the belt is required.

Note: This may be an option on other models of engine.

If the belts are over tightened, alternator bearing failure will occur.

10. Belt Maintenance

WARNING:

SEVERE HAZARD! KEEP HANDS AND OTHER BODY PARTS AWAY FROM MOVING/ROTATING PARTS. WEAR TIGHT FITTING CLOTHING AND KEEP YOUR HAIR SHORT OR TIE BACK. REMOVE ALL JEWELLERY BEFORE COMMENCING WORK. CHECK BEFORE STARTING THE ENGINE THAT ANY TOOLS OR RAGS USED DURING MAINTENANCE HAVE BEEN REMOVED FROM THE AREA.

- Ensure the ignition key is removed before carrying out any maintenance.
- Turn the battery master switch to the off position before carrying out any maintenance.
- Do not allow oil to contact the belt. Oil attacks the construction of the belt. This reduces the drive efficiency and will cause it to fail prematurely.
- Replace the belt if it cracks or splits and as the adjustment nears the limit of travel.
- Ensure the belt is correctly aligned using a straight edge. Misaligned belts will cause excessive belt wear and premature belt failure.

Some boat builders may remove one or more of the alternators during the installation of the engine. It is essential that when the alternators are refitted that the alignment is perfect or premature belt wear will occur.

11. Belt Replacement

WARNING:

SEVERE HAZARD! KEEP HANDS AND OTHER BODY PARTS AWAY FROM MOVING/ROTATING PARTS. WEAR TIGHT FITTING CLOTHING AND KEEP YOUR HAIR SHORT OR TIE BACK. REMOVE ALL JEWELLERY BEFORE COMMENCING WORK. CHECK BEFORE STARTING THE ENGINE THAT ANY TOOLS OR RAGS USED DURING MAINTENANCE HAVE BEEN REMOVED FROM THE AREA.

Shire 38, 40, 45 & 50:

- Ensure the ignition key is removed before replacing any belts.
- Turn the battery master switch to the off position before replacing any belts.

- Ensure that you have the correct replacement belts before starting this procedure. Some engines may have been fitted with non-standard optional alternators which may not use the belt sizes listed. Make a note of these belt sizes upon delivery.
- Loosen the top adjuster bolts and the lower mounting pivot nut and bolt.
- Push the alternator towards the engine to loosen the belt.
- Remove the belt.
- Hold the belt in position over the top alternator pulley. Rotate the engine if required by hand, to guide the new belt into the “vee”.
- Re-tension the belt as above.

Standard Self Adjusting Belt Tensioner (Shire 50 & 50WM) (Optional on other engines):

- Ensure the ignition key is removed before replacing any belts.
- Turn the battery master switch to the off position before replacing any belts.
- Ensure that you have the correct replacement belts before starting this procedure. Some engines may have been fitted with non-standard optional alternators which may not use the belt sizes listed. Make a note of these belt sizes upon delivery.
- Insert a ½” drive “T” bar into the square recess of the automatic tensioner.
- Pull lever bar in anti-clockwise direction to slacken off the belt.
- Remove the belt.
- Pull lever bar anti-clockwise again and refit the belt.
- Check that the belt is fitted correctly into all of the pulley grooves.

12. Control Panel Maintenance

WARNING:

REMOVE THE IGNITION KEY BEFORE WORKING IN ENGINE COMPARTMENT.
TURN BATTERY ISOLATION SWITCHES OFF.

- **To replace an illumination bulb:** Release the panel from its mounting. The bulbs are accessible from the rear of the panel. Remove the wires, unscrew the nut and pull out the bulb housing from the panel. Remove the bulb and replace. Refit bulb housing, screw the nut back up and refit the wires.
- **To replace any gauge:** Release the panel from its mounting. The gauges are accessible from the rear of the panel. Unplug the wire connectors, unscrew and pull the gauge out of the panel. Replace the gauge and refit. Reattach the wiring connectors.

Periodically squirt a lubricant into the key switch slot when the key has been removed (see Section 8 – Service Schedule). A lubricant such as WD40 – with silicon, would be suitable. Other lubricants are available. Then with the battery master switch turned off, operate the key switch a couple of times. This will ensure the lubricant works into the mechanism.

SECTION 8 – Service Schedule

NOTICE:

REFER TO THE YANMAR MANUAL PRIOR TO CARRYING OUT ANY SERVICE OR MAINTENANCE WORK.

WARNING:

PRIOR TO CARRYING OUT ANY SERVICE OR MAINTENANCE WORK MAKE SURE THE RELEVANT PERSONAL PROTECTION EQUIPMENT IS WORN.

1. Specifications and Capacities

Specification of Coolants and Lubricants to use:

Component	Lubricant
Engine	SAE 10W 40 API Class CD Oil
Coolant	50% Clean Water + 50% Ethylene Glycol Antifreeze
PRM 90 and 125 Gearbox	ATF (Automatic Transmission Fluid) Oil
PRM 150 and 280 Gearbox	Engine Oil

Engine Oil Capacity (with Filter):

Engine	Capacity (Litres)	Capacity (Pints)
38, 40, 45, 50	7.4	13

Gearbox Oil Capacity (Excluding Cooler):

Gearbox	Capacity (Litres)	Capacity (Pints)
PRM 90	0.57	1.0
PRM 125	0.8	1.4
PRM 150	1.4	2.5
PRM 280	1.5	2.7

2. Service Intervals

	Check	Change	Notes
Engine Oil & Filter	Daily (Level)	Every 350 Hours OR 12 Months*	First change after 50 hours
Gearbox Oil	Weekly (Level)	Every 350 Hours OR 12 Months*	First change after 25 hours
Coolant Level	Daily (Level)	Every 24 Months	-
Primary Fuel Filter **	50 hours	At first 50 hour service and then every 350 hours OR 12 Months*	Drain water every 50 hours OR Monthly***
Engine Fuel Filter **	-	Every 700 Hours OR 12 Months*	If large quantities of dirt or water are found in the Primary Fuel Filter, then change at 350 hours
Air Filter Element	175 Hours	Every 700 hours OR 24 Months*	Sooner if required
Drive Belts	Daily	As required	Adjust as necessary (The Shire 50 & 50WM domestic alternator may have an optional self-adjusting belt tensioner)
All Hoses	50 hours	As required	Check hoses for damage or leaks. Replace as necessary
Key Switch	Lubricate	Every 150 hours OR 12 Months*	As per instructions in Section 7 - Service Procedure
Auto Belt Tensioner (RDG502A5)	-	Every 700 hours	-

* Whichever occurs first.

** Only original filters which meet the Recreational Craft Directive should be fitted to your engine.

*** If large quantities of water are found in the fuel when the filter is drained, increase the frequency of draining.

SECTION 9 – Wiring Diagrams

1. Engine Wiring Diagram Shire 38, 40, 45 & 50(WM)

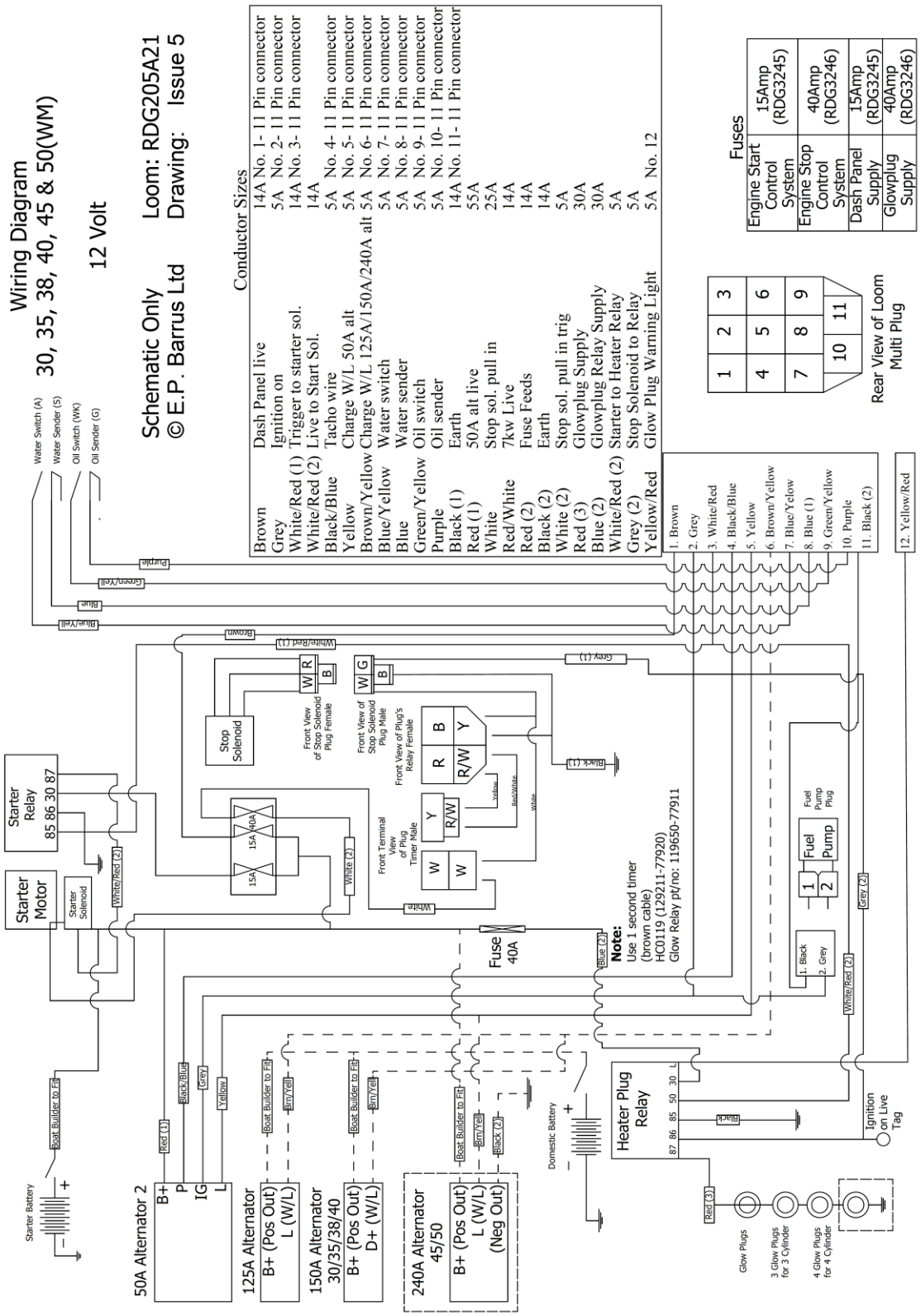

Figure 28: Shire 38, 40, 45 & 50(WM) Wiring Diagram

2. Standard Control Panel Wiring Diagram

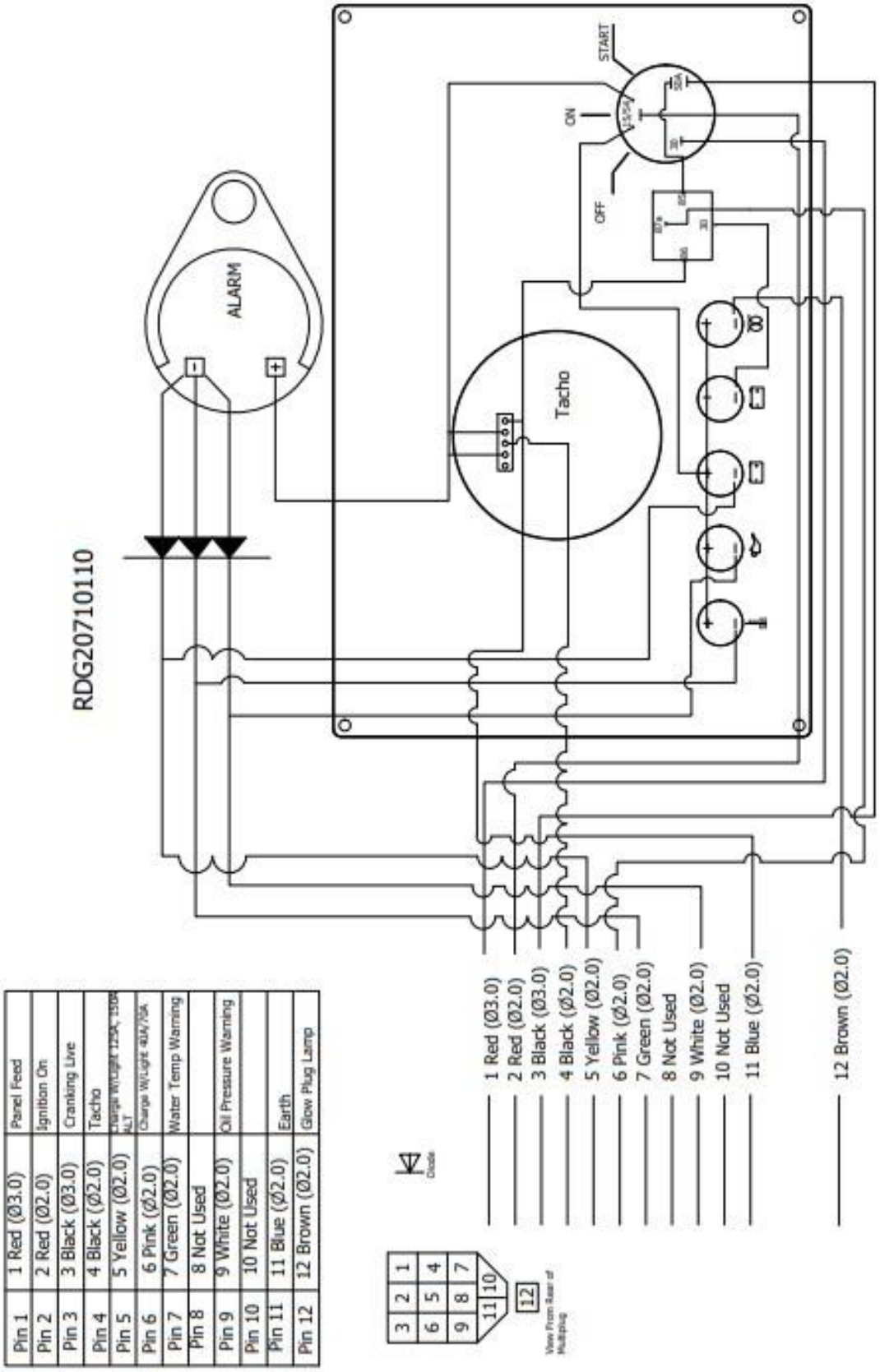

Figure 29: Standard Control Panel Wiring Diagram

3. Deluxe Control Panel Wiring Diagram

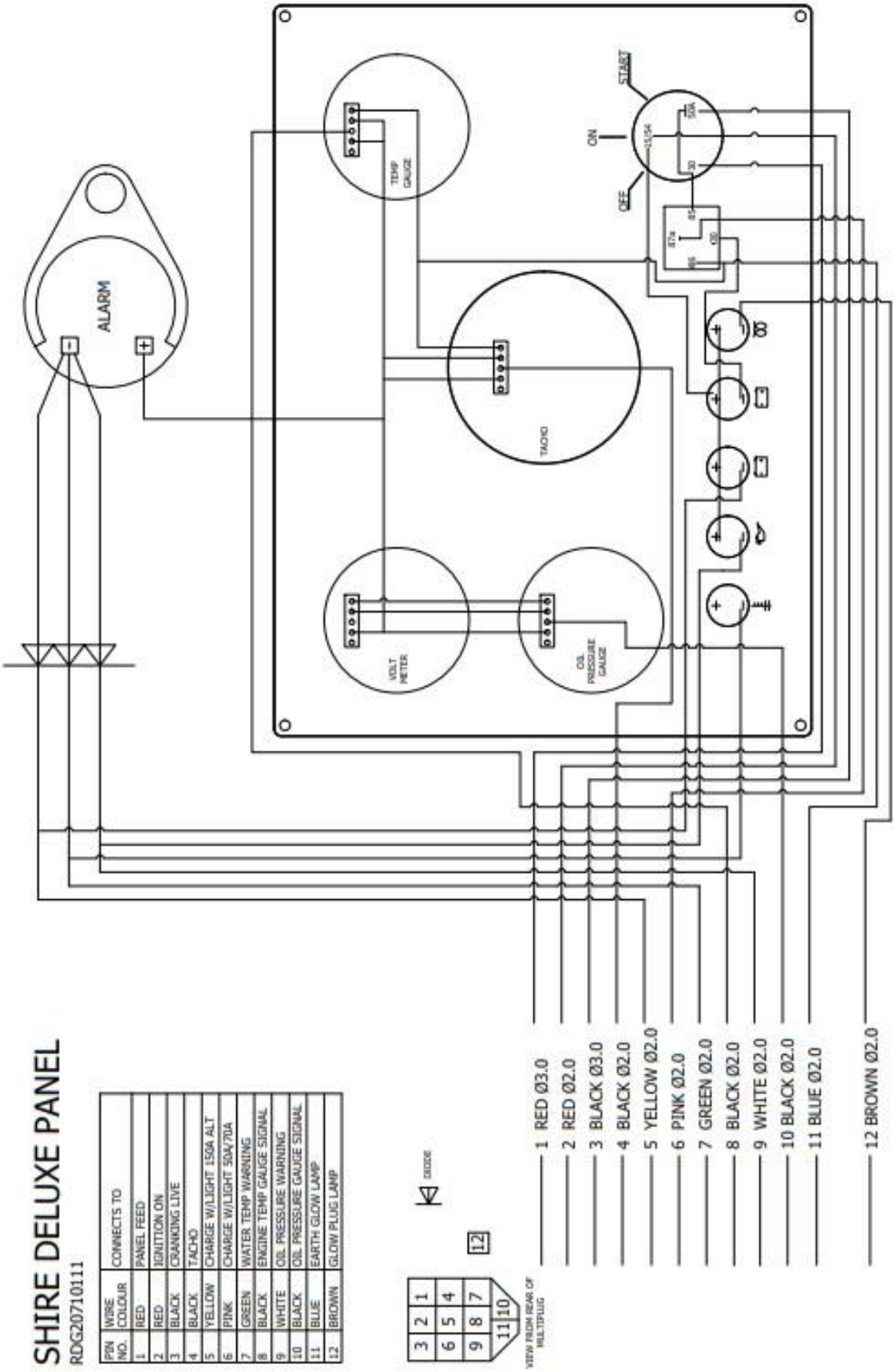

Figure 30: Deluxe Control Panel Wiring Diagram

4. Prestolite 24 Volt 120 Amp Alternator Wiring Diagram

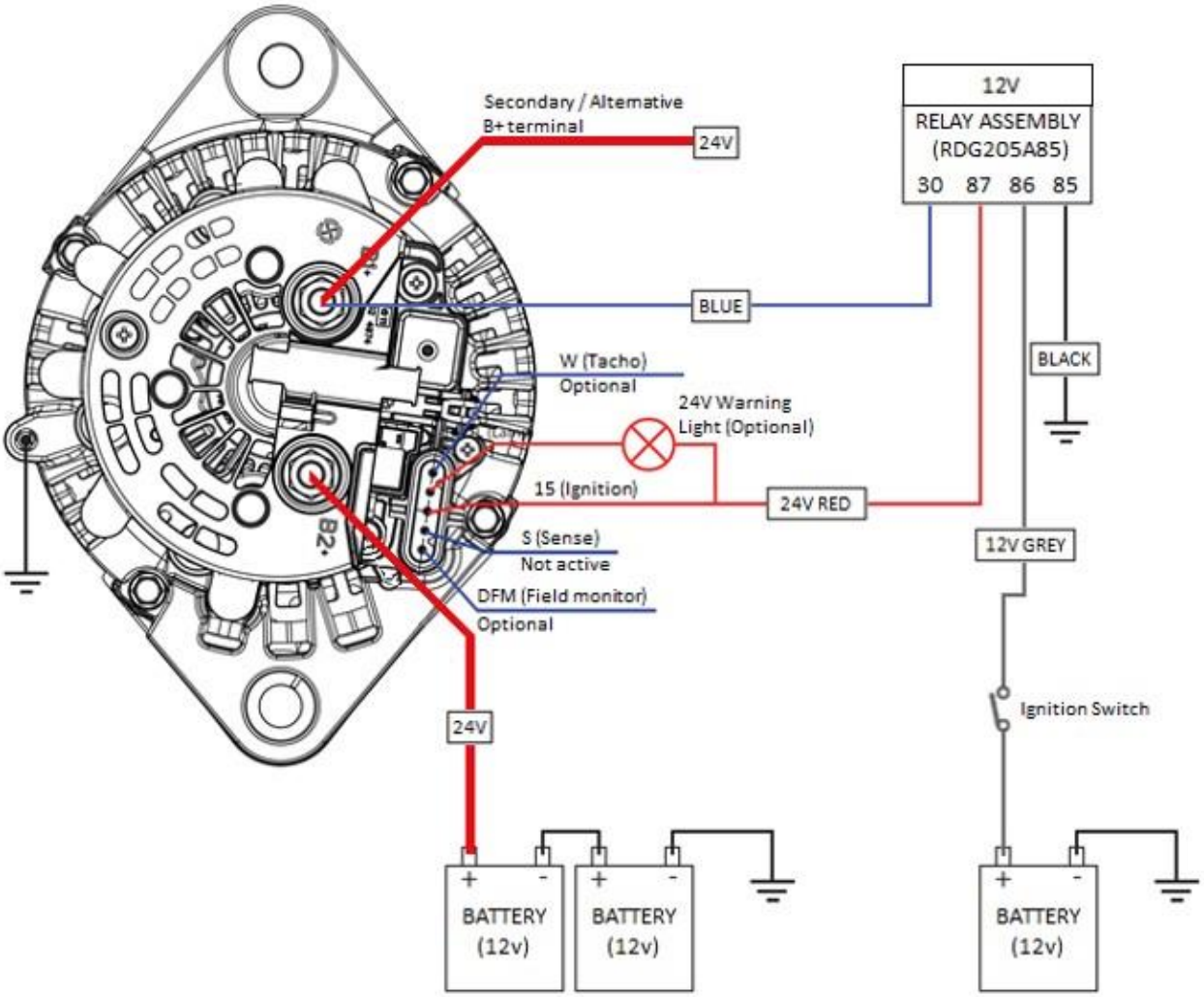

Figure 31: 24v 120A Alternator Wiring

Before wiring the 24 Volt 120 Amp Alternator, please read the information below:

- The S (Sense) terminal is not active on the AVI147J3110HD or AVI147J3113HD models so does not need connecting (on those two models).
- The W (Tacho) is an option (when a rev counter is fitted) and is not required for alternator functionality.
- The DFM (Field Monitor) usage is dependent on the engine and is not required for alternator functionality.
- The Terminal 15 (Ignition) provides excitation and **MUST** be connected.
- The L (Warning Lamp) is an option (when a warning lamp is fitted) and is not required for alternator functionality.

- The alternator is fitted with two B+ terminals. Either of the B+ terminals can be used.
- The alternator is earth return (grounded) Ensure there is a good earth connection to the engine.

A 12v ignition operated relay may be required to switch on the 24v supply to Terminal 15 if the alternator is a stand-alone item fitted to a 12v engine.

SECTION 10 – Technical Data

1. Engine Data

Engine Model	**4TNV88 BDYED SH**			
Type	Vertical In-Line Diesel Engine			
Combustion System	Direct Injection			
Aspiration	Natural			
Number of Cylinders	4			
Bore x Stroke	88 x 90mm			
Displacement	2.190L			
Rated Output/Speed	**Shire 38** 28kW (38hp) at 2200rpm	**Shire 40** 30kW (40hp) at 2400rpm	**Shire 45** 33kW (45hp) at 2800rpm	**Shire 50(WM)** 37kW (50hp) at 3000rpm
Low Idling	850 - 875 rpm			
High Idling (±25 rpm)	2400rpm	2600rpm	3000rpm	3200rpm
Direction of Rotation	Counter clockwise Viewed from Flywheel End			
Lubricating System	Forced Lubrication with Trochoid Pump			
Normal Oil Pressure at Rated Engine Speed	0.39 – 0.54 MPa / 3.9 – 5.4 bar / 56 – 78 psi			
Normal Oil Pressure at Low Idle Speed	0.068 MPa / 0.68 bar / 10 psi			
Electric Starting System	Starter Motor: DC12V Starter Capacity: 2.3kW Minimum Recommended Start Battery Capacity: 12V 65Ah			
Top Clearance (Piston to Head Clearance at tdc)	0.73 ± 0.06mm			
Valve Clearances (Exhaust and Inlet)	0.15 – 0.25mm			

2. Return Diesel System

Maximum Fuel Temp	33°c
Maximum Flow	0.6 Litre / Min (3000 rpm)
Flow at Idle	0.5 Litre / Min

The flexible fuel lines used on the engine comply with ISO 7840.

3. Dry Weight of Engine Data

Dry Weight of Engine (Including Gearbox)*	
Model	**Dry Weight (kg)**
Shire 38	260kg
Shire 40	270kg
Shire 45	277kg
Shire 50	278kg
Shire 50WM	284kg

* The dry weights stated are for the standard engine in each model range. If a different gearbox or additional alternators are ordered the weight will change accordingly.

SECTION 11 – Dealer List

Area	Company	Telephone	Email
BERKSHIRE	Driveline Marine	0118 942 3877	tam@drivelinemarine.com
	Marcus Marine Engineering Ltd (Servicing, Repairs & Breakdowns only)	07900890911	Marcus@marcusmarine.co.uk
BRISTOL	Advance Marine	01275 815910	phil@advancemarine.co.uk
CHESHIRE	Midland Chandlers	01928 751 800	preston.brook@midlandchandlers.co.uk
	Nantwich Canal Centre Ltd	01270 625122	info@nantwichcc.com
CUMBRIA	Windermere Aquatic Ltd	01539 442121	service@aquaticboatcentres.com
DERBYSHIRE	Midland Chandlers	01283 701445	willington@midlandchandlers.co.uk
DEVON	Sleeman & Hawken Ltd	01626 778266	sales@sleeman-hawken.co.uk
ESSEX	French Marine Motors Ltd	01206 305233 01255 850303	info@frenchmarine.com
HAMPSHIRE	Marine Power Ltd	0238 0403918	sales@marine-power.co.uk
HERTFORDSHIRE	Keypart Ltd	01923 276000	sales@keypart.com
	Lee Valley Marina	01920 870499 01920 293101	stansteadmarina@vibrantpartnerships.co.uk
LEICESTERSHIRE	Foxton Boat Services Ltd	01162 792285	foxtonboats@btinternet.com
LONDON	Lee Valley Marina	020 88061717	springfieldmarina@vibrantpartnerships.co.uk
MIDDLESEX	Lindon Lewis Marine	01932 247427	service@pushtheboatout.com
NORTHAMPTON	Grand Junction Boat Co.	01604 858043	info@boatrepairs.uk.com
	Midland Chandlers	01788 891401	braunston@midlandchandlers.co.uk
NOTTINGHAM	Farndon Marina	01636 705483	info@farndonmarina.co.uk
STAFFORDSHIRE	JD Boat Services Ltd	01902 791811	david@jdboats.co.uk
	Midland Chandlers	01785 712437	penkridge@midlandchandlers.co.uk
	River Canal Rescue	01785 785680	enquiries@rivercanalrescue.co.uk
	Stone Boatbuilding Company	01785 812688	stonechandlery@aol.com
	Streethay Wharf	01543 414808	office@streethaywharf.co.uk
WARWICKSHIRE	Springwood Haven Leisure Ltd	0845 4566572	enquiries@springwoodhaven.co.uk
WILTSHIRE	Devizes Marina	01380 725300	sales@devizesmarina.com

WORCESTERSHIRE	Crafted Boats Ltd	01527 876438	craftedboats@btconnect.com
	Evesham Marina	01386 768500	info@eveshammarina.co.uk
	Starline Narrowboats	01531 632003	enquiries@starlinenarrowboats.co.uk
YORKSHIRE	Rodley Boat Centre	01132 576132	rodleyboatcentre@msn.com
MONMOUTHSHIRE	Castle Narrowboats	01873 830001	info@castle.narrowboats.co.uk
EIRE	Southshore Marina & Diesel Ltd	028383 41010	info@southshoremarine.co.uk

SECTION 12 – Shire Parts

Model	38	40	45	50
Primary Fuel Filter	Not standard fitment	RDG9188346	RDG9188346	RDG9188346
Secondary Fuel Filter	119802-55810	119802-55810	119802-55810	119802-55810
50A Alternator	129423-77200	129423-77200	129423-77200	129423-77200
50A Alt Belt	RDG6079	RDG6079	RDG6079	RDG004A4 (up to Serial No xx-02830) RDG6079 (from Serial No xx-02831 for Model with Belt Auto Tensioner and Dry Manifold) RDG004A4 (from Serial No xx-02831 for Model with Belt Auto Tensioner and Wet Manifold)
125A Alternator	128990-77250 (from Serial No xx-02663)	-	-	-
125A Alt Belt	RDG0047511 (from Serial No xx-02663)	-	-	-
150A Alternator	RDG20110201 (up to Serial No xx-02662)	RDG20110201	-	-
150A Alt Belt	RDG6076 (up to Serial No xx-02662)	RDG6076	-	-
240A Alternator	-	-	RDG2019682	RDG2019682
240A Alt Belt	-	-	RDG0047498	RDG0047498
Air Filter Element	RDG5795	RDG5795	RDG5795	RDG5795
Oil Filter	129150-35170	129150-35170	129150-35170	129150-35170

Control Panel:

Standard Control Panel	RDG20710110
Deluxe Control Panel	RDG20710111

'E' Kit:

3.5kW Alternator Belt	RDG0047511
5kW Alternator Belt	RDG0047511

Hybrid System:

24 Volt Alternator Belt (Port) (from Serial No xx-02639)	RDG004A219
24 Volt Alternator Belt (Starboard) (from Serial No xx-02639)	RDG004A220
48v 60A Balmar Alternator Belt	RDG0047498

Note: The hybrid system alternator belt should be changed every 500 hours.

Note: For engines with the 48v 60A Balmar alternator fitted, the belt and regulator will need to be fitted by the customer. Fit the regulator to Balmar instructions.

Fuses & Relays:

The electrical system is fitted with three or four blade type fuses:

1	Engine Stop Control System Fuse	40amp	RDG3246
2	Control Panel Supply Fuse	15amp	RDG3245
3	Engine Start Control System Fuse	15amp	RDG3245
4	Glow Plug Fuse	40amp	RDG3246
5	Cold Start Relay	-	RDG5279
6	Starter Relay	-	RDG1396

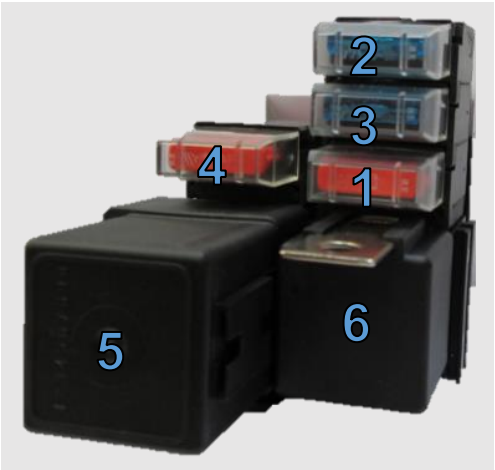

Figure 32: Fuses & Relays

Engine Oil:
Engine Oil is available from your Shire Dealer in convenient 5 litre containers (Part Number RDG6110).

Diesel Fuel Additive:
Diesel fuel additive is available from your Shire Dealer in a handy 500ml container (Part No RDG80210219).

Shire Parts Book:
On the E.P Barrus Website there is a Shire 38 Parts Book, Shire 40 Parts Book, Shire 45 Parts Book and Shire 50 Parts Book which has a more extensive list of parts available for your engine. To access the Shire Parts Books on the internet, type the following short link into your search engine:

https://www.barrus.co.uk/divisions/marine/diesel/shire/downloads/shire-parts/?p=1

SECTION 13 – Declarations

1. Declaration of Conformity for Recreational Craft Propulsion Engine with the requirements of Directive 2013/53/EU.

Name of Engine Manufacturer: **E.P.Barrus LTD**

Name of Authorised Representative: **E.P.Barrus LTD**
Address: **E.P.Barrus LTD, Launton Road, Bicester, Oxon, OX26 4UR, England, United Kingdom**

Name of Notified Body for exhaust emission assessment: HPi Verification Services (Ireland) Ltd
Address: HPi Verification Services (Ireland) Ltd, Clonross
Town: Dunshaughlin Post Code: A85 XN59
Country: Ireland ID Number: 2810

Conformity assessment module used for exhaust emissions: ☐ B+C ☐ B+D ☐ B+E ☐ B+F ☐ G ☐ H
Or engine type-approved according to: Directive 2013/53/EU
Other Community Directives applied:

Description of Engine(s) and Essential Requirements

Engine Type: Inboard Engine **Fuel Type**: Diesel **Combustion Cycle**: 4 Stroke

Identification of Engine(s) covered by this Declaration of Conformity

Engine Model	**Engine Type**	**Engine Family code**	**Type Approval Certificate Number**
Shire 38 / 40 / 45 / 50	4TNV 88 BDYED	G2YDXCL0164N3N	HPiVS-iR1105-T005-I-01-00

Essential Requirements	Standards	Other normative document/method.	Technical file	Specify in more detail *= Mandatory standard.
Annex 1.B- Exhaust Emissions				
B.1 Engine Identification	☐	☑ RCD (II)	☑	2013/53 EU
B.2 Exhaust emission requirements	☑*	☐	☐	* EN ISO 8178-4:2017 Test Cycle 1
B.3 Durability	☐	☐	☐	2013/53 EU
B.4 Owner's Manual	☑	☐	☐	ISO10240
Annex 1. C- Noise Emissions	See Declaration of Conformity of the craft in which the engine(s) has(have) been installed			

This declaration of conformity is issued under the sole responsibility of the manufacturer. I declare on behalf of the engine manufacturer that the engine(s) [is (are) in conformity with the type(s) for which above mentioned EC type-examination or type approval certificate(s) has (have) been issued and][1] will meet the exhaust emission requirements of Directive 2013/53/EU when installed in a recreational craft, in accordance with the engine manufacturer's supplied instructions and that this (these) engine(s) must not be put into service until the recreational craft which it is (they are) to be installed has been declared in conformity with the relevant provisions of the above mentioned Directives.

Tim Hart
Sales Director
Signed: Bicester, UK
Date: 01/01/2021

2. Declaration of Conformity for Recreational Craft Propulsion Engine with the requirements of the Recreational Craft Regulations 2017 (UKCA Marking).

Name of Engine Manufacturer: **E.P.Barrus LTD**

Name of Authorised Representative: **E.P.Barrus LTD**
Address: **E.P.Barrus LTD, Launton Road, Bicester, Oxon, OX26 4UR, England, United Kingdom**

Name of Notified Body for exhaust emission assessment: HPi CEproof Ltd
Address: HPi CEproof Ltd, The Manor House, Howbery Park
Town: Wallingford Post Code: OX10 8BA
Country: United Kingdom ID Number: 1521

Conformity assessment module used for exhaust emissions: ☐ B+C ☐ B+D ☐ B+E ☐ B+F ☐ G ☐ H
Or engine type-approved according to: Directive 2013/53/EU
Other Community Directives applied:

Description of Engine(s) and Essential Requirements

Engine Type: Inboard Engine **Fuel Type**: Diesel **Combustion Cycle**: 4 Stroke

Identification of Engine(s) covered by this Declaration of Conformity

Engine Model	**Engine Type**	**Engine Family code**	**Type Approval Certificate Number**
Shire 38 / 40 / 45 / 50	4TNV 88 BDYED	G2YDXCL0164N3N	HPiUK-R1105-T005-I-01-00

Essential Requirements	Standards	Other normative document/method.	Technical file	Specify in more detail *= Mandatory standard.
Annex 1.B- Exhaust Emissions				
B.1 Engine Identification	☐	☑ RCD (II)	☑	2013/53 EU
B.2 Exhaust emission requirements	☑*	☐	☐	* EN ISO 8178-4:2017 Test Cycle 1
B.3 Durability	☐	☐	☐	2013/53 EU
B.4 Owner's Manual	☑	☐	☐	ISO10240
Annex 1. C- Noise Emissions	See Declaration of Conformity of the craft in which the engine(s) has(have) been installed			

This declaration of conformity is issued under the sole responsibility of the manufacturer. I declare on behalf of the engine manufacturer that the engine(s) [is (are) in conformity with the type(s) for which above mentioned EC type-examination or type approval certificate(s) has (have) been issued and][1] will meet the requirements of the Recreational Craft Regulations 2017 when installed in a recreational craft, in accordance with the engine manufacturer's supplied instructions and that this (these) engine(s) must not be put into service until the recreational craft which it is (they are) to be installed has been declared in conformity with the relevant provisions of the above mentioned Directives.

Tim Hart
Sales Director
Signed: Bicester, UK
Date: 07/07/2021

3. Declaration of Incorporation of Partly Completed Machinery

(Original declaration according to Directive 2006/42/EC, Annex II, part 1B)

1. The manufacturer:	E. P. Barrus Limited Glen Way Launton Road Bicester OX26 4UR England United Kingdom			
2. Authorised Compiler of Relevant Technical Documentation:	Mr. Graeme Aldridge Glen Way Launton Road Bicester OX26 4UR England United Kingdom			
3. Partly Completed Machinery:	Designation:	Marine engines for propulsion of, and incorporation into, watercraft.		
	Description:		Serial No.:	and their derivatives.
		Shire 38	XX-2400-X	
		Shire 40	XX-2400-X	
		Shire 45	XX-2400-X	
		Shire 50	XX-2400-X	
	Base Engine:	Yanmar 4TNV88 BDYED		
4. The essential health and safety requirements of the Directive 2006/42/EC, Annex I, relating to the design and construction of the engines have been applied and fulfilled as shown in Annex A of this Declaration. The relevant technical documentation is compiled in accordance with part B of Annex VII of the Directive. The engines also comply with Directive 2013/53/EU (Recreational Craft Directive), when installed in accordance with the installation instructions that accompany the engine.				
5. In case of a reasoned request by the national authority, we will supply the relevant technical information of the above named engines to the person in charge.				
6. This partly completed machinery must not be put into service until the final machinery into which it has been incorporated has been declared in conformity with the provisions of this directive, where appropriate.				
7. This declaration is made on 27 June 2018 in Bicester, Oxfordshire.				
Tim Hart Sales Director E. P. Barrus Limited				

ANNEX A

The essential health and safety requirements for machinery can only be made compliant partly by Barrus. Therefore Barrus recommends to double-check the paragraphs from Annex 1 of the Directive 2006/42/EC mentioned below for compliance with the Directive for your particular machine.

Chapter	Subject	Applied	Fulfilled	Remark
1.1 GENERAL REMARKS				
1.1.2	Principles Of safety Integration	Yes *1	Yes*1	Consult accompanying manuals for instructions on safe installation.
	*1 For the following principles mentioned in the Directive: (a) the design and construction is fit for function as a marine engine; (b) risks have been eliminated or reduced as far as possible; Principles (c), (d) and (e) require measures to be taken by the boat builder for compliance with the directive.			
1.1.3	Materials and Products	Yes *2	Yes *2	
	*2 The engine has been designed and built using materials which are not known to present a hazard to safety or health. Use recommended fluids and filling positions only. Refer to manual for further information. Other materials used during the installation are to be designed and assessed by the boat builder.			
1.1.4	Lighting	Not Applicable		By boat builder/installer.
1.1.5	Design of machinery to facilitate its handling	Yes	Yes	All engines have appropriate packaging and lifting eyes
1.1.6	Ergonomics	Not Applicable		By boat builder/installer.
1.1.7	Operating Positions			
1.1.8	Seating			
1.2 CONTROL SYSTEMS				
1.2.1	Safety and reliability of control systems	Yes *3	No *3	
	*3 The control systems are designed and constructed to withstand the intended operating stresses and external influences. A fault in the hardware or software of the control system, errors in the control system logic, or reasonably foreseen human error during operation does not lead to hazardous situations. The operation of the control systems is to be designed and implemented by the boat builder. Contact Barrus for advice if required.			
1.2.2	Control devices	Yes *4	No *4	
	*4 The engine is fitted with the basic required control devices. The location and operation of these, and other, control systems is to be designed and implemented by the boat builder. Contact Barrus for advice if required.			
1.2.3	Starting	Yes *5	No *5	Starter motor installed
	*5 The operation of the starting system is controlled by a key switch on the panel. Contact Barrus for advice if required. The location and operation of this, and other, control systems is to be designed and implemented by the boat builder. Contact Barrus for advice if required.			
1.2.4.1	Normal stop	Yes *6	No *6	
	*6 The operation of the starting system is controlled by a key switch on the panel. The engine is fitted with a control device (energized to run stop solenoid) whereby it can be brought safely to a complete stop. The location and operation of this, and other, control systems is to be designed and implemented by the boat builder. Contact Barrus for advice if required.			
1.2.4.2	Operational stop	Not applicable		By boat builder/installer.
1.2.4.3	Emergency stop			
1.2.4.4	Assembly of machinery			
1.2.5	Selection of control or operating modes			
1.2.6	Failure of power supply			

1.3 PROTECTION AGAINST MECHANICAL HAZARDS				
1.3.1	Risk of loss of stability	Yes *7	Yes *7	
	*7 Lifting eyes are provided on the engine. The secure and stable installation of engine is to be carried out by the boat builder/installer.			
1.3.2	Risk of break-up during operation	Yes *8	Yes *8	
	*8 Instructions to indicate the type and frequency of inspections and maintenance required for safety reasons are in the accompanying manual. The mounting, positioning and/or guarding of parts where a risk of rupture or disintegration remains (in particular V-belts and pulleys), are to be made compliant by the boat builder/installer.			
1.3.3	Risks due to falling or ejected objects	Not applicable		
1.3.4	Risks due to surface edges or angles	Yes	Yes	
1.3.5	Risks related to combined machinery	Not applicable		By boat builder/installer.
1.3.6	Risks related to variations in operating conditions			
1.3.7	Risks related to moving parts	No	No	By boat builder/installer.
1.3.8	Choice of protection against risks arising from moving parts	No	No	
1.3.8.1	Moving transmission parts	No	No	
1.3.8.2	Moving parts involved in the process	Not applicable		By boat builder
1.3.9	Risks of uncontrolled movements			
1.4 REQUIRED CHARACTERISTICS OF GUARDS AND PROTECTIVE DEVICES				
1.4.1	General requirements	No	No	Guards to be specified and fitted by the boat builder/installer.
1.4.2.1	Fixed guards	No	No	
1.4.2.2	Interlocking movable guards	Not applicable		By boat builder/installer.
1.4.2.3	Adjustable guards restricting access			
1.4.3	Special requirements for protective devices			
1.5 RISKS DUE TO OTHER HAZARDS				
1.5.1	Electricity supply	Not applicable		By boat builder
1.5.2	Static electricity	Not applicable		By boat builder
1.5.3	Energy supply other than electricity	Yes *9	Yes *9	This concerns the fuel injection system and gearbox hydraulic system where fitted.
	*9 For the fuel filter, fuel injection pump, fuel injection nozzles, high pressure fuel injection pipes and fuel hoses supplied and installed on the engine by Barrus. Any other fuel system parts connected to the engine to be made compliant by the boat builder/installer.			
1.5.4	Errors of fitting	No	No	Fitting or refitting should only be done by trained and skilled personnel.
1.5.5	Extreme temperatures	Yes *10	Yes *10	Protection or warnings to be made by the boat builder
	*10 'Hot Surface' warning stickers are affixed to the rocker cover and/or the twin thermostat housing. All other protection or warnings to be made by the boat builder			
1.5.6	Fire	No	No	By boat builder
1.5.7	Explosion	No	No	

1.5.8	Noise	No	No	
1.5.9	Vibrations	No	No	
1.5.10	Radiation	No	No	
1.5.11	External radiation	Yes	Yes	
1.5.12	Laser radiation	Not applicable		
1.5.13	Emissions of hazardous materials and substances	Yes *11	Yes *11	
	*11 Except for the exhaust, fuel, and cooling water system which needs to be properly connected by the boat builder or installer according to the Shire Manual.			
1.5.14	Risk of being trapped in a machine	Not applicable		By boat builder/installer.
1.5.15	Risk of slipping, tripping or falling			
1.5.16	Lighting			
1.6 MAINTENANCE				
1.6.1	Machinery maintenance	Yes	Yes	
1.6.2	Access to operating positions and servicing points	Not applicable		By boat builder/installer.
1.6.3	Isolation of energy sources			
1.6.4	Operator intervention			
1.6.5	Cleaning of internal parts	Yes	Yes	
1.7 INFORMATION				
1.7.1	Information and warnings on the machinery	Yes *12	Yes *12	
	*12 A 'Refer to manual before carrying out engine installation, operation and maintenance' label is fitted to the engine. 'Hot Surface' warning stickers are fitted on surfaces that may become hot during operation. All other protection or warnings to be made by the boat builder/installer.			
1.7.1.1	Information and information devices	Yes *13	Yes *13	
	*13 The control panel is simple to understand and use. Other control measures and information on the use of the machinery is to be carried out by the boat builder/installer.			
1.7.1.2	Warning devices	Yes *14	Yes *14	
	*14 The control panel provides warnings. The location and installation of the control panel is to be carried out by the boat builder/installer.			
1.7.2	Warning of residual risks	No	No	By boat builder/installer.
1.7.3	Marking of machinery	Yes *15	No *15	
	*15 The engine is CE marked with a brand, model designation and serial number. Full CE compliance to be carried out by the boat builder/installer.			
1.7.4	Instructions	Yes	Yes	
1.7.4.1	General principles for the drafting of instructions	Yes *16	Yes *16	
	*16 For (a) and (b). The boat builder/installer to comply with (c) and (d) for the total machine and use of it			
1.7.4.2	Contents of the instructions	Yes *17	Yes *17	
	*17 For (a), (b), (d), (e), (g), (h), (i), (k), (p), (r), (s), (t). The boat builder/installer to comply with (c), (d), (f), (g), (h), (i), (j), (l), (m), (n), (o), (q), (u), (v).			
1.7.4.3	Sales literature	Yes	Yes	

4. EU Declaration of Conformity with the Exhaust Emissions Requirements of Directive 2013/53/EU

(Original declaration according to Directive 2013/53/EU)

1. The manufacturer:	E. P. Barrus Limited Glen Way Launton Road Bicester OX26 4UR			
2. Authorised Compiler of Relevant Technical Documentation:	Mr. Graeme Aldridge Glen Way Launton Road Bicester OX26 4UR			
3. Partly Completed Machinery:	Designation:	Marine engines for propulsion of, and incorporation into, watercraft.		
	Description:		Serial No.:	and their derivatives.
		Shire 38	XX-2400-X	
		Shire 40	XX-2400-X	
		Shire 45	XX-2400-X	
		Shire 50	XX-2400-X	
	Base Engine:	Yanmar 4TNV88 BDYED		
4. The essential health and safety requirements of the Directive 2006/42/EC, Annex I, relating to the design and construction of the engines have been applied and fulfilled as shown in Annex A of this Declaration. The relevant technical documentation is compiled in accordance with part B of Annex VII of the Directive. The engines also comply with Directive 2013/53/EU (Recreational Craft Directive), when installed in accordance with the Installation instructions that accompany the engine.				
5. In case of a reasoned request by the national authority, we will supply the relevant technical information of the above named engines to the person in charge.				
6. This partly completed machinery must not be put into service until the final machinery into which it has been incorporated has been declared in conformity with the provisions of this directive, where appropriate.				
7. This declaration is made on 27 June 2018 in Bicester, Oxfordshire.				
 Tim Hart Sales Director E. P. Barrus Limited				

SECTION 14 – Lubricant Safety Data Sheets

1. Golden Film Running In Oil

SAFETY DATA SHEET
Golden Film Running in oil

SECTION 1: IDENTIFICATION OF THE SUBSTANCE/MIXTURE AND OF THE COMPANY/UNDERTAKING

1.1. Product identifier

Product name	Golden Film Running in oil
Product No.	7265-000
Internal Id	10751
REACH Registration number	n/a Mixture

1.2. Relevant identified uses of the substance or mixture and uses advised against

Identified uses Engine oil.

1.3. Details of the supplier of the safety data sheet

Supplier

Morris Lubricants
Castle Foregate
Shrewsbury
SY1 2EL
08.45 - 17.00 GMT
T: (+44)(0)1743 232200
F: (+44)(0)1743 353584
sds@morris-lubricants.co.uk

1.4. Emergency telephone number

+44 (0)1743 232200 (08.45 - 17.00 hrs GMT)

SECTION 2: HAZARDS IDENTIFICATION

2.1. Classification of the substance or mixture

Classification (1999/45/EEC) Not classified.

2.2. Label elements

Risk Phrases

NC	Not classified.

Safety Phrases

P13	Safety data sheet available for professional user on request.
P14	Contains Calcium long chain alkaryl sulphonate . May produce an allergic reaction.

2.3. Other hazards

This product does not contain any PBT or vPvB substances.

SECTION 3: COMPOSITION/INFORMATION ON INGREDIENTS

3.2. Mixtures

Solvent refined mineral oil		60-100%
CAS-No.: 64742-65-0	EC No.: 265-169-7	Registration Number 01-2119471299-27

Classification (EC 1272/2008) Not classified.	Classification (67/548/EEC) Not classified.

Distillates (petroleum) solvent-dewaxed heavy paraffinic		10-30%
CAS-No.: 64742-65-0	EC No.: 265-169-7	Registration Number: 01-2119471299-27
A petroleum product. DMSO extract < 3 % weight (IP 346)		
Classification (EC 1272/2008) Not classified.	Classification (67/548/EEC) Not classified.	

Phosphorodithioic acid, O,O-di-C1-14-alkyl esters, zinc salts		< 1%
CAS-No.: 68649-42-3	EC No.: 272-028-3	Registration Number: 01-2119657973-23-xxxx
Classification (EC 1272/2008) Eye Dam. 1 - H318 Aquatic Chronic 2 - H411	Classification (67/548/EEC) Xi;R41. N;R51/53.	

Calcium long chain alkaryl sulphonate		< 1%
CAS-No.: 2906-36-7	EC No.: 271-877-7	Registration Number: 01-2119657986-16
Classification (EC 1272/2008) Skin Sens. 1 - H317 Aquatic Chronic 4 - H413	Classification (67/548/EEC) R53,R43.	

The Full Text for all R-Phrases and Hazard Statements are Displayed in Section 16.

REACH Registration number n/a Mixture
Ingredient notes
A petroleum product. DMSO extract < 3 % weight (IP 346)
Composition Comments
The data shown are in accordance with the latest EC Directives.

SECTION 4: FIRST AID MEASURES

4.1. Description of first aid measures

General information
Get medical attention if any discomfort continues.
Inhalation
In case of inhalation of spray mist: Move person into fresh air and keep at rest. Get medical attention if any discomfort continues.
Ingestion
Get medical attention if any discomfort continues. Do not induce vomiting.
Skin contact
Remove contaminated clothing immediately and wash skin with soap and water.
Eye contact
Immediately flush with plenty of water for up to 15 minutes. Remove any contact lenses and open eyes wide apart. Get medical attention promptly if symptoms occur after washing.

4.2. Most important symptoms and effects, both acute and delayed

General information
If aspiration into the lungs is suspected, eg when vomitting, admit to hospital immediately.
Inhalation
Upper respiratory irritation.
Ingestion
May cause discomfort if swallowed. The product contains mineral oil, which if aspirated into the lungs through vomitting after ingestion, may result in chemical pneumonia.
Skin contact
Prolonged contact may cause redness, irritation and dry skin.
Eye contact
Irritation of eyes and mucous membranes.

4.3. Indication of any immediate medical attention and special treatment needed

Treat Symptomatically.

SECTION 5: FIREFIGHTING MEASURES

5.1. Extinguishing media

Extinguishing media
Extinguish with foam, carbon dioxide, dry powder or water fog.
Unsuitable extinguishing media
Do not use water jet as an extinguisher, as this will spread the fire.

5.2. Special hazards arising from the substance or mixture

Hazardous combustion products
In case of fire, toxic gases (CO, CO2, NOx) may be formed. Fire may also create other unidentified organic gases some of which may be toxic.
Unusual Fire & Explosion Hazards
Heat from fire could result in drums bursting

5.3. Advice for firefighters

Special Fire Fighting Procedures
Keep run-off water out of sewers and water sources. Dike for water control.
Protective equipment for fire-fighters
Self-contained breathing apparatus.

SECTION 6: ACCIDENTAL RELEASE MEASURES

6.1. Personal precautions, protective equipment and emergency procedures

For personal protection, see section 8. In case of spills, beware of slippery floors and surfaces.

6.2. Environmental precautions

Contain spillage with sand or earth. Do not allow to enter drains, sewers or watercourses. The product is insoluble in water and will spread on the water surface.

6.3. Methods and material for containment and cleaning up

Contain spillage with sand or earth. Use sealed containers for reclamation or dispose of at a licenced hazardous waste collection point. Avoid contact with water. Spillages or uncontrolled discharges into watercourses must be IMMEDIATELY alerted to the Environmental Agency or other appropriate regulatory body. In case of spillage on water prevent the spread by use of suitable barrier equipment

6.4. Reference to other sections

For personal protection, see section 8. See section 11 for additional information on health hazards. For waste disposal, see section 13.

SECTION 7: HANDLING AND STORAGE

7.1. Precautions for safe handling

Avoid spilling, skin and eye contact. Always remove oil with soap and water or skin cleaning agent, never use organic solvents. Do not use oil-contaminated clothing or shoes, and do not put rags moistened with oil into pockets.

7.2. Conditions for safe storage, including any incompatibilities

Store in tightly closed original container in a dry, cool and well-ventilated place.
Storage Class
Miscellaneous hazardous material storage.

7.3. Specific end use(s)

The identified uses for this product are detailed in Section 1.2.

SECTION 8: EXPOSURE CONTROLS/PERSONAL PROTECTION

8.1. Control parameters

Name	STD	TWA - 8 Hrs	STEL - 15 Min	Notes
Distillates (petroleum) solvent-dewaxed heavy paraffinic	ACGIH	5 mg/m3	10 mg/m3	
Solvent refined mineral oil	ACGIH	5 mg/m3	10 mg/m3	

ACGIH = American Conference of Governmental Industrial Hygienists.

8.2. Exposure controls

Protective equipment

Process conditions
Use engineering controls to reduce air contamination to permissible exposure level.
Engineering measures
Provide adequate ventilation, including appropriate local extraction, to ensure that the defined occupational exposure limit is not exceeded.
Respiratory equipment
No specific recommendation made, but respiratory protection must be used if the general level exceeds the recommended occupational exposure limit.
Hand protection
The most suitable glove must be chosen in consultation with the gloves supplier, who can inform about the breakthrough time of the glove material.
Eye protection
If risk of splashing, wear safety goggles or face shield.
Other Protection
Use barrier creams to prevent skin contact.
Hygiene measures
Wash promptly with soap & water if skin becomes contaminated.
Thermal hazards
Not anticipated under normal conditions of use. The product is combustible if heated excessively and an ignition source is applied.
Environmental Exposure Controls
Do not allow product to contaminate land.

SECTION 9: PHYSICAL AND CHEMICAL PROPERTIES

9.1. Information on basic physical and chemical properties

Appearance	Liquid
Colour	Amber. to Brown.
Odour	Characteristic. Oil smell.
Solubility	Insoluble in water Soluble in: Organic solvents.
Initial boiling point and boiling range (°C)	>320°C
Melting point (°C)	<-20
Relative density	0.882 15
Vapour density (air=1)	>1 Air = 1
Vapour pressure	<0.1 kPa @ 20°C
Viscosity	92 cSt 40 Not water soluble.
Decomposition temperature (°C)	
Not determined	
Flash point (°C)	>200 PM Closed cup.
Auto Ignition Temperature (°C)	Not determined
Flammability Limit - Lower(%)	
Not known.	
Flammability Limit - Upper(%)	
Not known.	
Partition Coefficient (N-Octanol/Water)	Not determined. log Kow > 6

The above figure is typical of mineral oil.
Explosive properties

This product is not considered explosive.
Other Flammability
Product is not flammable but on excessive heating may become combustible.
Material is considered non-oxidizing.

9.2. Other information

Volatility Description	Not considered volatile. Vapours may be emitted on excessive heating. The product is a complex mixture, the majority of which would not be classed as a VOC. However it cannot be discounted that trace or low levels of VOC's may be present.

SECTION 10: STABILITY AND REACTIVITY

10.1. Reactivity

No specific reactivity hazards associated with this product.

10.2. Chemical stability

Stable under normal temperature conditions and recommended use.

10.3. Possibility of hazardous reactions

Unlikely to occur under normal conditions of use.
Hazardous Polymerisation
Unlikely to occur.

10.4. Conditions to avoid

Avoid heat, flames and other sources of ignition.

10.5. Incompatible materials

Materials To Avoid
Strong oxidising substances.

10.6. Hazardous decomposition products

Thermal decomposition or combustion may liberate carbon oxides and other toxic gases or vapours.

SECTION 11: TOXICOLOGICAL INFORMATION

11.1. Information on toxicological effects

Acute toxicity:
Acute Toxicity (Oral LD50)
> 2000 mg/kg Rat
Not expected to be highly toxic based on information of ingredients. Based on available data the classification criteria are not met.

Acute Toxicity (Dermal LD50)
> 2000 mg/kg Rabbit
Not expected to be highly toxic based on information of ingredients. Based on available data the classification criteria are not met.
Acute Toxicity (Inhalation LC50)
Not determined.
The product is unlikely to present any significant inhalation hazard at ambient temperatures and under normal conditions of use.

Skin Corrosion/Irritation:
The classification criteria are not met. May cause mild skin irritation. Prolonged or repeated skin contact eg. from clothing wet with lubricant may cause dermatitis. Symptoms may include redness, edema, drying, and cracking skin.

Serious eye damage/irritation:
May cause mild, short lasting discomfort to eyes.

Respiratory or skin sensitisation:
No evidence to suggest the product will be a respiratory sensitiser. Repeated exposure to oil mists may cause respiratory damage.
Not expected to be a skin sensitizer based on information on components.

Carcinogenicity:
This product contains mineral oils which are considered to be severly refined and not considered to be carcinogenic under IARC. All of the oils in this product have been demonstrated to contain less than 3% extractables by the IP346 test

Reproductive Toxicity:
No data available to suggest the product will cause reproductive toxicity.

Aspiration hazard:
Viscosity
Kinematic viscosity > 20.5 mm2/s.

The product viscosity is greater than the upper limit assigned for classification. The product contains mineral oil. If aspirated into the lungs e.g. through vomitting after ingestion admit to hospital immediately.

General information
This product has low toxicity. Only large volumes may have adverse impact on human health.

Inhalation
Unlikely to be hazardous by inhalation because of the low vapour pressure of the substance at ambient temperature.

Ingestion
No harmful effects expected in amounts likely to be ingested by accident.

Skin contact
Skin irritation is not anticipated when used normally. Repeated exposure may cause skin dryness or cracking.

Eye contact
May cause temporary eye irritation.
Specific effects
Prolonged or repeated contact with used oil may cause serious skin diseases, such as dermatitis and skin cancer.

SECTION 12: ECOLOGICAL INFORMATION

Ecotoxicity
Based on available data the classification criteria are not met. Not regarded as dangerous for the environment.

12.1. Toxicity

Acute Fish Toxicity
Based on available data the classification criteria are not met. Not considered toxic to fish.
Based on available data the classification criteria are not met.

12.2. Persistence and degradability

The product contains mineral oil which has limited biodegradability in CEC test methods but will biodegrade slowly in aerobic water and sediments and is considered ultimately biodegradable.
Degradability
The product is not readily biodegradable.
The product is based on highly refined mineral oils that are considered stable to hydrolysis.
The product is not considered readily biodegradeable, albeit the major constituents are expected to ultimately biodegrade.
Biological Oxygen Demand
Not determined.
Chemical Oxygen Demand
Not determined.

12.3. Bioaccumulative potential

Bioaccumulative potential
Bioaccumulation is unlikely to be significant because of the low water solubility of this product.
Bioaccumulation factor
Not known.
Partition coefficient
Not determined.
log Kow > 6
The above figure is typical of mineral oil.

12.4. Mobility in soil

Mobility:
The product is non-volatile. The product is insoluble in water and will spread on the water surface.
Henry's Law Constant
Not determined.

12.5. Results of PBT and vPvB assessment

This product does not contain any PBT or vPvB substances.

12.6. Other adverse effects

None known.

SECTION 13: DISPOSAL CONSIDERATIONS

General information
Waste to be treated as controlled waste. Disposal to licensed waste disposal site in accordance with local Waste Disposal Authority.

13.1. Waste treatment methods

Dispose of waste and residues in accordance with local authority requirements.

SECTION 14: TRANSPORT INFORMATION

General	The product is not covered by international regulation on the transport of dangerous goods (IMDG, IATA, ADR/RID).

14.1. UN number

Not applicable.

14.2. UN proper shipping name

Not applicable.

14.3. Transport hazard class(es)

Not applicable.

14.4. Packing group

Not applicable.

14.5. Environmental hazards

Environmentally Hazardous Substance/Marine Pollutant
No.

14.6. Special precautions for user

Not applicable.

14.7. Transport in bulk according to Annex II of MARPOL73/78 and the IBC Code

Not applicable.

SECTION 15: REGULATORY INFORMATION

15.1. Safety, health and environmental regulations/legislation specific for the substance or mixture

Uk Regulatory References
Health and Safety at Work Act 1974.
Environmental Listing
The Pollution Prevention and Control Act 1999. Special Waste regulations 1996. Control of Pollution (Oil Storage) (England) Regulations 2001
Statutory Instruments
The Chemicals (Hazard Information and Packaging for Supply) Regulations 2009 (S.I 2009 No. 716).
Approved Code Of Practice
Safety Data Sheets for Substances and Preparations.
Guidance Notes
Workplace Exposure Limits EH40.
EU Legislation
Dangerous Preparations Directive 1999/45/EC. Dangerous Substance Directive 67/548/EEC. Regulation (EC) No 1907/2006 of the European Parliament and of the Council of 18 December 2006 concerning the Registration, Evaluation, Authorisation and Restriction of Chemicals (REACH), establishing a European Chemicals Agency, amending Directive 1999/45/EC and repealing Council Regulation (EEC) No 793/93 and Commission Regulation (EC) No 1488/94 as well as Council Directive 76/769/EEC and Commission Directives 91/155/EEC, 93/67/EEC, 93/105/EC and 2000/21/EC, including amendments. Regulation (EC) No 1272/2008 of the European Parliament and of the Council of 16 December 2008 on classification, labelling and packaging of substances and mixtures, amending and repealing Directives 67/548/EEC and 1999/45/EC, and amending Regulation (EC) No 1907/2006 with amendments.

15.2. Chemical Safety Assessment

No chemical safety assessment has been carried out.

SECTION 16: OTHER INFORMATION

Revision Comments
NOTE: Lines within the margin indicate significant changes from the previous revision.
Revision Date 21/05/2015
Revision 2
Supersedes date 23/08/2010
Risk Phrases In Full
R53 May cause long-term adverse effects in the aquatic environment.
R43 May cause sensitisation by skin contact.
NC Not classified.
R41 Risk of serious damage to eyes.
R51/53 Toxic to aquatic organisms, may cause long-term adverse effects in the aquatic environment.

Hazard Statements In Full
H318 Causes serious eye damage.
H317 May cause an allergic skin reaction.
H413 May cause long lasting harmful effects to aquatic life.
H411 Toxic to aquatic life with long lasting effects.

2. Ground Force 10W-40

SAFETY DATA SHEET
Ground Force 10W-40

SECTION 1: Identification of the substance/mixture and of the company/undertaking

1.1. Product identifier

Product name	Ground Force 10W-40
Product number	7450
Internal identification	GHS21580
REACH registration number	n/a Mixture

1.2. Relevant identified uses of the substance or mixture and uses advised against

Identified uses	Engine oil.
Uses advised against	Non specified unless otherwise stated within this MSDS

1.3. Details of the supplier of the safety data sheet

Supplier

Morris Lubricants
Castle Foregate
Shrewsbury
SY1 2EL

08.45 - 17.00 GMT
T: (+44)(0)1743 232200
F: (+44)(0)1743 353584
sds@morris-lubricants.co.uk

1.4. Emergency telephone number

Emergency telephone +44 (0)1743 232200 (08.45 - 17.00 hrs GMT)

SECTION 2: Hazards identification

2.1. Classification of the substance or mixture

Classification

Physical hazards	Not Classified
Health hazards	Not Classified
Environmental hazards	Not Classified
Classification (67/548/EEC or 1999/45/EC)	Not Classified

2.2. Label elements

Hazard statements	NC Not Classified
Supplemental label Information	EUH210 Safety data sheet available on request.

2.3. Other hazards

This product does not contain any substances classified as PBT or vPvB.

SECTION 3: Composition/information on ingredients

3.2. Mixtures

Distillates (petroleum) solvent-dewaxed heavy paraffinic			30-60%
CAS-No.: 64742-65-0	EC No.: 265-169-7	REACH registration number: 01-2119471299-27-XXXX	
A petroleum product. DMSO extract < 3 % weight (IP 346)			
Classification Not classified.	Classification (67/548/EEC or 1999/45/EC) -		

Distillates,hydrotreated heavy paraffinic			10-30%
CAS number: 64742-54-7	EC number: 265-157-1	REACH registration number: 01-2119484627-25-0014	
Classification Asp. Tox. 1 - H304	Classification (67/548/EEC or 1999/45/EC) -		

Highly refined mineral oil (C15 - C50)			1-5%
CAS number: -	EC number: 276-738-4	REACH registration number: 01-2119474889-13-XXXX	
Classification Asp. Tox. 1 - H304	Classification (67/548/EEC or 1999/45/EC) -		

The Full Text for all R-Phrases and Hazard Statements are Displayed in Section 16.

Composition comments If REACH registration numbers do not appear the substance is either exempt from registration, does not meet the minimum volume threshold for registration, the registration date has not yet come due or this information is proprietary.

SECTION 4: First aid measures

4.1. Description of first aid measures

General information Get medical attention if any discomfort continues.

Inhalation If spray/mist has been inhaled, proceed as follows. Move affected person to fresh air and keep warm and at rest in a position comfortable for breathing. Get medical attention if any discomfort continues.

Ingestion Get medical attention if any discomfort continues. Do not induce vomiting.

Skin contact Remove contaminated clothing immediately and wash skin with soap and water.

Eye contact Rinse immediately with plenty of water. Remove any contact lenses and open eyelids wide apart. Continue to rinse for at least 15 minutes. Get medical attention promptly if symptoms occur after washing.

4.2. Most important symptoms and effects, both acute and delayed

General information If aspiration into the lungs is suspected, eg when vomitting, admit to hospital immediately.

Inhalation Upper respiratory irritation.

Ingestion May cause discomfort if swallowed. The product contains mineral oil, which if aspirated into the lungs through vomitting after ingestion, may result in chemical pneumonia.

Skin contact Prolonged contact may cause redness, irritation and dry skin.

Eye contact Irritation of eyes and mucous membranes.

4.3. Indication of any immediate medical attention and special treatment needed

Notes for the doctor Treat symptomatically.

SECTION 5: Firefighting measures

5.1. Extinguishing media

Suitable extinguishing media Extinguish with foam, carbon dioxide, dry powder or water fog.

Unsuitable extinguishing Media Do not use water jet as an extinguisher, as this will spread the fire.

5.2. Special hazards arising from the substance or mixture

Specific hazards Heat from fire could result in drums bursting

Hazardous combustion Products Protection against nuisance dust must be used when the airborne concentration exceeds 10 mg/m3. Oxides of carbon. Oxides of nitrogen. Fire may also create other unidentified organic gases some of which may be toxic.

5.3. Advice for firefighters

Protective actions during Firefighting Control run-off water by containing and keeping it out of sewers and watercourses.

Special protective equipment for firefighters Wear self-contained breathing apparatus.

SECTION 6: Accidental release measures

6.1. Personal precautions, protective equipment and emergency procedures

Personal precautions For personal protection, see Section 8. In case of spills, beware of slippery floors and surfaces.

6.2. Environmental precautions

Environmental precautions Contain spillage with sand or earth. Avoid the spillage or runoff entering drains, sewers or watercourses. The product is insoluble in water and will spread on the water surface.

6.3. Methods and material for containment and cleaning up

Methods for cleaning up Contain spillage with sand or earth. Collect spillage for reclamation or disposal in sealed containers via a licensed waste contractor. Avoid water contacting spilled material or leaking containers. Spillages or uncontrolled discharges into watercourses must be reported immediately to the Environmental Agency or other appropriate regulatory body. In case of spillage on water prevent the spread by use of suitable barrier equipment

6.4. Reference to other sections

Reference to other sections For personal protection, see Section 8. See Section 11 for additional information on health hazards. For waste disposal, see section 13.

SECTION 7: Handling and storage

7.1. Precautions for safe handling

Usage precautions Avoid spilling. Always remove oil with soap and water or skin cleaning agent, never use organic solvents. Do not use oil-contaminated clothing or shoes, and do not put rags moistened with oil into pockets.

7.2. Conditions for safe storage, including any incompatibilities

Storage precautions Store in tightly-closed, original container in a dry, cool and well-ventilated place.

Storage class Miscellaneous hazardous material storage.

7.3. Specific end use(s)

Specific end use(s) The identified uses for this product are detailed in Section 1.2.

SECTION 8: Exposure Controls/personal protection

8.1. Control parameters

Occupational exposure limits
Distillates (petroleum) solvent-dewaxed heavy paraffinic

Long-term exposure limit (8-hour TWA): ACGIH 5 mg/m³
Short-term exposure limit (15-minute): ACGIH 10 mg/m³

Distillates,hydrotreated heavy paraffinic

Long-term exposure limit (8-hour TWA): ACGIH 5
Short-term exposure limit (15-minute): ACGIH 10 mg/m³

Highly refined mineral oil (C15 - C50)

Long-term exposure limit (8-hour TWA): ACGIH 5 ppm
Short-term exposure limit (15-minute): ACGIH 10 ppm

Zinc bis[O-(6-methylheptyl)]bis[O-(sec-butyl)]bis(dithiophosphate)

Short-term exposure limit (15-minute): 10 mg/m³ mist

ACGIH = American Conference of Governmental Industrial Hygienists.

Bis(nonylphenyl)amine

DNEL
Industry - Dermal; Long term systemic effects: 0.62 mg/kg
Industry - Inhalation; Long term systemic effects: 4.37 mg/m³
Consumer - Dermal; Long term systemic effects: 0.31 mg/kg
Consumer - Inhalation; Long term systemic effects: 1.09 mg/m³
Consumer - Oral; Long term systemic effects: 0.31 mg/kg

PNEC
- Marine water; 0.01 mg/l
- Sediment (Freshwater); 132000 mg/kg
- Sediment (Marinewater); 13200 mg/kg
- Soil; 263000 mg/kg
- Fresh water; 0.1 mg/l

Phenol, dodecyl-,sulfurized, carbonates, calcium salts, overbased

DNEL
Industry - Dermal; Short term systemic effects: 80 mg/kg/day
Industry - Inhalation; Short term systemic effects: 167 mg/m³
Industry - Dermal; Long term systemic effects: 20.8 mg/kg/day
Industry - Inhalation; Long term systemic effects: 70.52 mg/m³
Consumer - Dermal; Short term systemic effects: 40 mg/kg/day
Consumer - Oral; Short term systemic effects: 50 mg/m³
Consumer - Oral; Long term systemic effects: 5 mg/kg/day
Consumer - Dermal; Long term systemic effects: 10.42 mg/kg/day
Consumer - Inhalation; Long term systemic effects: 52.6 mg/m

PNEC
- Fresh water; 0.1 mg/l
- Marine water; 0.01 mg/l
- Sediment (Freshwater); 132000 mg/kg
- Sediment (Freshwater); 13200 mg/kg
- Soil; 263000 mg/kg

Reaction mass of isomers of: C7-9-alkyl 3-(3,5-di-tert-butyl-4-hydroxyphenyl)propionate

DNEL
Industry - Dermal; Short term systemic effects: 20 mg/kg
Industry - Dermal; Short term local effects: 1 mg/cm²
Industry - Dermal; Long term systemic effects: 0.22 mg/kg
Industry - Dermal; Long term local effects: 0.006 mg/cm²

PNEC
- Fresh water; 0.0043 mg/l
- Marine water; 0.00043 mg/l
- Sediment (Freshwater); 233 mg/kg
- Sediment (Marinewater); 23.3 mg/kg
- Soil; 189 mg/kg

8.2. Exposure controls

Protective equipment

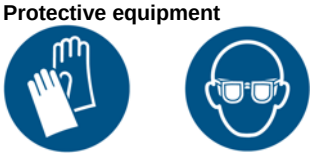

Appropriate engineering controls	Provide adequate general and local exhaust ventilation. Observe any occupational exposure limits for the product or ingredients.
Eye/face protection	Eyewear complying with an approved standard should be worn if a risk assessment indicates eye contact is possible. The following protection should be worn: Chemical splash goggles or face shield.
Hand protection	The most suitable glove should be chosen in consultation with the glove supplier/manufacturer, who can provide information about the breakthrough time of the glove material.
Other skin and body Protection	Use barrier creams to prevent skin contact.
Hygiene measures	Use engineering controls to reduce air contamination to permissible exposure level. Wash promptly with soap and water if skin becomes contaminated.
Respiratory protection	No specific recommendations. Respiratory protection must be used if the airborne contamination exceeds the recommended occupational exposure limit.
Thermal hazards	Not anticipated under normal conditions of use. The product is combustible if heated excessively and an ignition source is applied.
Environmental exposure Controls	Do not allow product to contaminate land.

SECTION 9: Physical and Chemical Properties

9.1. Information on basic physical and chemical properties

Appearance	Liquid.
Colour	Pale Amber
Odour	Characteristic. Oil-like.
Odour threshold	Not known.
pH	Not applicable.
Melting point	-39°C Pour point
Initial boiling point and range	>320°C @ 101.3 kPa
Flash point	208°C PMCC (Pensky-Martens closed cup).
Evaporation rate	Not relevant.
Upper/lower flammability or explosive limits	Not known.
Other flammability	Product is not flammable but on excessive heating may become combustible.
Vapour pressure	<0.1 kPa @ 20°C
Vapour density	Not determined.
Relative density	0.870 @ 15.6°C
Solubility(ies)	Insoluble in water. Soluble in the following materials: Organic solvents.
Partition coefficient	Not determined. log Kow: > 7 The above figure is typical of mineral oil.
Auto-ignition temperature	No specific test data are available.

Decomposition Temperature	Not determined.
Viscosity	89.4 cSt @ 40°C
Explosive properties	Not considered to be explosive.
Explosive under the influence of a flame	Not considered to be explosive.
Oxidising properties	The mixture itself has not been tested but none of the ingredient substances meet the criteria for classification as oxidising.

9.2. Other information

Volatile organic compound The product is a complex mixture, the majority of which would not be classed as a VOC. However it cannot be discounted that trace or low levels of VOC's may be present.

SECTION 10: Stability and reactivity

10.1. Reactivity

Reactivity There are no known reactivity hazards associated with this product.

10.2. Chemical stability

Stability Stable at normal ambient temperatures and when used as recommended.

10.3. Possibility of hazardous reactions

Possibility of hazardous reactions	Unlikely to occur under normal conditions of use. Unlikely to occur.

10.4. Conditions to avoid

Conditions to avoid	Avoid heat, flames and other sources of ignition.

10.5. Incompatible materials

Materials to avoid	Strong oxidising agents.

10.6. Hazardous decomposition products

Hazardous decomposition Products	Oxides of carbon. Oxides of nitrogen.

SECTION 11: Toxicological information

11.1. Information on toxicological effects

Acute toxicity – oral **Notes (oral LD_{50})**	Not expected to be highly toxic based on information of ingredients. Based on available data the classification criteria are not met.
Acute toxicity – dermal **Notes (dermal LD_{50})**	Not expected to be highly toxic based on information of ingredients. Based on available data the classification criteria are not met.
Acute toxicity – inhalation **Notes (inhalation LC_{50})**	Not determined. The product is unlikely to present any significant inhalation hazard at ambient temperatures and under normal conditions of use.
Serious eye damage/irritation **Serious eye damage/irritation**	May cause mild, short lasting discomfort to eyes.
Respiratory sensitisation **Respiratory sensitisation**	No evidence to suggest the product will be a respiratory sensitiser. Repeated exposure to oil mists may cause respiratory damage.
Skin sensitisation **Skin sensitisation**	Not expected to be a skin sensitizer based on information on components.

Carcinogenicity

Carcinogenicity This product contains mineral oils which are considered to be severly refined and not considered to be carcinogenic under IARC. All of the oils in this product have been demonstrated to contain less than 3% extractables by the IP346 test

Reproductive toxicity

Reproductive toxicity - fertility No data available to suggest the product will cause reproductive toxicity.

Specific target organ toxicity - single exposure

STOT - single exposure Based on available data the classification criteria are not met.

Specific target organ toxicity - repeated exposure

STOT - repeated exposure Based on available data the classification criteria are not met.

Aspiration hazard

Aspiration hazard Kinematic viscosity > 20.5 mm²/s. The product viscosity is greater than the upper limit assigned for classification. The product contains mineral oil. If aspirated into the lungs e.g. through vomitting after ingestion admit to hospital immediately.

General information This product has low toxicity. Only large quantities are likely to have adverse effects on human health.

Inhalation Unlikely to be hazardous by inhalation because of the low vapour pressure of the product at ambient temperature.

Ingestion No harmful effects expected from quantities likely to be ingested by accident.

Skin contact Skin irritation should not occur when used as recommended. Repeated exposure may cause skin dryness or cracking.

Eye contact May cause temporary eye irritation.

Acute and chronic health Hazards Prolonged or repeated contact with used oil may cause serious skin diseases, such as dermatitis and skin cancer.

SECTION 12: Ecological Information

Ecotoxicity Based on available data the classification criteria are not met. Not regarded as dangerous for the environment.

12.1. Toxicity

Toxicity Based on available data the classification criteria are not met. Not considered toxic to fish.

Acute toxicity – aquatic Invertebrates Based on available data the classification criteria are not met.

12.2. Persistence and degradability

Persistence and degradability The product contains mineral oil which has limited biodegradability in CEC test methods but will biodegrade slowly in aerobic water and sediments and is considered ultimately biodegradable.

Stability (hydrolysis) The product is based on highly refined mineral oils that are considered stable to hydrolysis.

Biodegradation The product is not considered readily biodegradeable, albeit the major constituents are expected to ultimately biodegrade.

Biological oxygen demand Not determined.

Chemical oxygen demand Not determined.

12.3. Bioaccumulative potential

Bioaccumulative potential Bioaccumulation is unlikely to be significant because of the low water-solubility of this product.

Partition coefficient Not determined. log Kow: > 7 The above figure is typical of mineral oil.

12.4. Mobility in soil

Mobility The product is non-volatile. The product is insoluble in water and will spread on the water surface.

Henry's law constant Not determined.

12.5. Results of PBT and vPvB assessment

Results of PBT and vPvB assessment	This product does not contain any substances classified as PBT or vPvB.

12.6. Other adverse effects

Other adverse effects	None known.

SECTION 13: Disposal considerations

13.1. Waste treatment methods

General information	This material and its container must be disposed of as hazardous waste. Dispose of waste via a licensed waste disposal contractor.
Disposal methods	Waste, residues, empty containers, discarded work clothes and contaminated cleaning materials should be collected in designated containers, labelled with their contents. Dispose of waste via a licensed waste disposal contractor.
Waste class	European waste catalogue (EWC) number = 13 02 08* (other engine, gear and lubricating oil)

SECTION 14: Transport information

General	The product is not covered by international regulations on the transport of dangerous goods (IMDG, IATA, ADR/RID).

14.1. UN number
Not applicable.

14.2. UN proper shipping name
Not applicable.

14.3. Transport hazard class(es)
No transport warning sign required.

14.4. Packing group
Not applicable.

14.5. Environmental hazards
Environmentally hazardous substance/marine pollutant

14.6. Special precautions for user
Not applicable.

14.7. Transport in bulk according to Annex II of MARPOL73/78 and the IBC Code

Transport in bulk according to Annex II of MARPOL 73/78 and the IBC Code	Not applicable.

SECTION 15: Regulatory information

15.1. Safety, health and environmental regulations/legislation specific for the substance or mixture

National regulations	Health and Safety at Work etc. Act 1974 (as amended). The Chemicals (Hazard Information and Packaging for Supply) Regulations 2009 (SI 2009 No. 716). Control of Substances Hazardous to Health Regulations 2002 (as amended). The Carriage of Dangerous Goods and Use of Transportable Pressure Equipment Regulations 2009 (SI 2009 No. 1348) (as amended) ["CDG 2009"].
EU legislation	Dangerous Preparations Directive 1999/45/EC. Dangerous Substances Directive 67/548/EEC. Regulation (EC) No 1907/2006 of the European Parliament and of the Council of 18 December 2006 concerning the Registration, Evaluation, Authorisation and Restriction of Chemicals (REACH) (as amended). Regulation (EC) No 1272/2008 of the European Parliament and of the Council of 16 December 2008 on classification, labelling and packaging of substances and mixtures (as amended).
Guidance	Workplace Exposure Limits EH40. Safety Data Sheets for Substances and Preparations.

15.2. Chemical safety assessment

No chemical safety assessment has been carried out.

Inventories

Canada - DSL/NDSL
All the ingredients are listed or exempt.

US - TSCA
All the ingredients are listed or exempt.

Australia - AICS
All the ingredients are listed or exempt.

Korea - KECI
All the ingredients are listed or exempt.

China - IECSC
All the ingredients are listed or exempt.

Philippines – PICCS
All the ingredients are listed or exempt.

New Zealand - NZIOC
All the ingredients are listed or exempt.

SECTION 16: Other information

Revision comments	NOTE: Lines within the margin indicate significant changes from the previous revision.
Revision date	11/11/2015
Revision	1
SDS number	21580
Hazard statements in full	H304 May be fatal if swallowed and enters airways.

3. Liquimatic Super ATF

SAFETY DATA SHEET
Liquimatic Super ATF

SECTION 1: Identification of the substance/mixture and of the company/undertaking

1.1. Product identifier

Product name	Liquimatic Super ATF
Product number	7290
Internal identification	GHS21439
REACH registration number	n/a Mixture

1.2. Relevant identified uses of the substance or mixture and uses advised against

Identified uses	Transmission fluid
Uses advised against	Non specified unless otherwise stated within this MSDS

1.3. Details of the supplier of the safety data sheet

Supplier	Morris Lubricants Castle Foregate Shrewsbury SY1 2EL 08.45 - 17.00 GMT T: (+44)(0)1743 232200 F: (+44)(0)1743 353584 sds@morris-lubricants.co.uk

1.4. Emergency telephone number

Emergency telephone	+44 (0)1743 232200 (08.45 - 17.00 hrs GMT)

SECTION 2: Hazards identification

2.1. Classification of the substance or mixture

Classification

Physical hazards	Not Classified
Health hazards	Not Classified
Environmental hazards	Not Classified
Classification (67/548/EEC or 1999/45/EC)	Not Classified

2.2. Label elements

Hazard statements	NC Not Classified
Supplemental label Information	EUH210 Safety data sheet available on request.

Contains Distillates (petroleum), solvent-dewaxed heavy paraffinic

2.3. Other hazards

This product does not contain any substances classified as PBT or vPvB.

SECTION 3: Composition/information on ingredients

3.2. Mixtures

Distillates (petroleum) solvent-dewaxed heavy paraffinic			60-100%
CAS-No.: 64742-65-0	EC No.: 265-169-7	REACH registration number: 01-2119471299-27-XXXX	
Classification Asp. Tox. 1 - H304	Classification (67/548/EEC or 1999/45/EC) -		

Lubricating oil (petroleum) C20-C50,hydrotreated,neutral oil based			10-30%
CAS number: 72623-87-1	EC number: 276-738-4	REACH registration number: 01-2119474889-13-0000	
Classification Asp. Tox. 1 - H304	Classification (67/548/EEC or 1999/45/EC) -		

Methacrylate copolymer CAS number: —	1-5%
Classification Eye Irrit. 2 - H319	

The Full Text for all R-Phrases and Hazard Statements are Displayed in Section 16.

Composition comments If REACH registration numbers do not appear the substance is either exempt from registration, does not meet the minimum volume threshold for registration, the registration date has not yet come due or this information is proprietary.

SECTION 4: First aid measures

4.1. Description of first aid measures

General information Get medical attention if any discomfort continues.

Inhalation If spray/mist has been inhaled, proceed as follows. Move affected person to fresh air and keep warm and at rest in a position comfortable for breathing. Get medical attention if any discomfort continues.

Ingestion Get medical attention if any discomfort continues. Do not induce vomiting.

Skin contact Remove contaminated clothing immediately and wash skin with soap and water.

Eye contact Rinse immediately with plenty of water. Remove any contact lenses and open eyelids wide apart. Continue to rinse for at least 15 minutes. Get medical attention promptly if symptoms occur after washing.

4.2. Most important symptoms and effects, both acute and delayed

General information If aspiration into the lungs is suspected, eg when vomitting, admit to hospital immediately.

Inhalation Upper respiratory irritation.

Ingestion May cause discomfort if swallowed. The product contains mineral oil, which if aspirated into the lungs through vomitting after ingestion, may result in chemical pneumonia.

Skin contact Prolonged contact may cause redness, irritation and dry skin.

Eye contact Irritation of eyes and mucous membranes.

4.3. Indication of any immediate medical attention and special treatment needed

Notes for the doctor Treat symptomatically.

SECTION 5: Firefighting measures

5.1. Extinguishing media

Suitable extinguishing media Extinguish with foam, carbon dioxide, dry powder or water fog.

Unsuitable extinguishing Media Do not use water jet as an extinguisher, as this will spread the fire.

5.2. Special hazards arising from the substance or mixture

Specific hazards Heat from fire could result in drums bursting

Hazardous combustion products Protection against nuisance dust must be used when the airborne concentration exceeds 10 mg/m3. Oxides of carbon. Oxides of nitrogen. Fire may also create other unidentified organic gases some of which may be toxic.

5.3. Advice for firefighters

Protective actions during firefighting Control run-off water by containing and keeping it out of sewers and watercourses.

Special protective equipment for firefighters Wear self-contained breathing apparatus.

SECTION 6: Accidental release measures

6.1. Personal precautions, protective equipment and emergency procedures

Personal precautions For personal protection, see Section 8. In case of spills, beware of slippery floors and surfaces.

6.2. Environmental precautions

Environmental precautions Contain spillage with sand or earth. Avoid the spillage or runoff entering drains, sewers or watercourses. The product is insoluble in water and will spread on the water surface.

6.3. Methods and material for containment and cleaning up

Methods for cleaning up Contain spillage with sand or earth. Collect spillage for reclamation or disposal in sealed containers via a licensed waste contractor. Avoid water contacting spilled material or leaking containers. Spillages or uncontrolled discharges into watercourses must be reported immediately to the Environmental Agency or other appropriate regulatory body. In case of spillage on water prevent the spread by use of suitable barrier equipment

6.4. Reference to other sections

Reference to other sections For personal protection, see Section 8. See Section 11 for additional information on health hazards. For waste disposal, see section 13.

SECTION 7: Handling and storage

7.1. Precautions for safe handling

Usage precautions Avoid spilling. Always remove oil with soap and water or skin cleaning agent, never use organic solvents. Do not use oil-contaminated clothing or shoes, and do not put rags moistened with oil into pockets.

7.2. Conditions for safe storage, including any incompatibilities

Storage precautions Store in tightly-closed, original container in a dry, cool and well-ventilated place.

Storage class Miscellaneous hazardous material storage.

7.3. Specific end use(s)

Specific end use(s) The identified uses for this product are detailed in Section 1.2.

SECTION 8: Exposure Controls/personal protection

8.1. Control parameters

Occupational exposure limits
Distillates (petroleum), solvent-dewaxed heavy paraffinic

Long-term exposure limit (8-hour TWA): ACGIH 5 mg/m³
Short-term exposure limit (15-minute): ACGIH 10 mg/m³

Lubricating oil (petroleum) C20-C50,hydrotreated,neutral oil based

Long-term exposure limit (8-hour TWA): ACGIH 5 mg/m³
Short-term exposure limit (15-minute): ACGIH 10 mg/m³

Distillates (petroleum), hydrotreated light naphthenic

Long-term exposure limit (8-hour TWA): ACGIH 5 mg/m³

ACGIH = American Conference of Governmental Industrial Hygienists.

Distillates (petroleum), solvent-dewaxed heavy paraffinic (CAS: 64742-65-0)

DNEL	- Inhalation; : 5.4 mg/m³
PNEC	- ; 9.33 mg/kg

8.2. Exposure controls

Protective equipment

Appropriate engineering Controls	Provide adequate general and local exhaust ventilation. Observe any occupational exposure limits for the product or ingredients.
Eye/face protection	Eyewear complying with an approved standard should be worn if a risk assessment indicates eye contact is possible. The following protection should be worn: Chemical splash goggles or face shield.
Hand protection	The most suitable glove should be chosen in consultation with the glove supplier/manufacturer, who can provide information about the breakthrough time of the glove material.
Other skin and body Protection	Use barrier creams to prevent skin contact.
Hygiene measures	Use engineering controls to reduce air contamination to permissible exposure level. Wash
Respiratory protection	No specific recommendations. Respiratory protection must be used if the airborne contamination exceeds the recommended occupational exposure limit.
Thermal hazards	Not anticipated under normal conditions of use. The product is combustible if heated excessively and an ignition source is applied.
Environmental exposure Controls	Do not allow product to contaminate land.

SECTION 9: Physical and Chemical Properties

9.1. Information on basic physical and chemical properties

Appearance	Liquid.
Colour	Red.
Odour	Characteristic. Oil-like.
Odour threshold	Not known.

pH	Not applicable.
Melting point	-40°C Pour point
Initial boiling point and range	>320°C @ 101.3 kPa
Flash point	196°C PMCC (Pensky-Martens closed cup).
Evaporation rate	Not relevant.
Upper/lower flammability or explosive limits	Not known.
Other flammability	Product is not flammable but on excessive heating may become combustible.
Vapour pressure	<0.1 kPa @ 20°C
Vapour density	Not determined.
Relative density	0.864 @ 15.6°C
Solubility(ies)	Insoluble in water. Soluble in the following materials: Organic solvents.
Partition coefficient	Not determined. log Kow: > 7 The above figure is typical of mineral oil.
Auto-ignition temperature	No specific test data are available.
Decomposition Temperature	Not determined.
Viscosity	34.6 cSt @ 40°C
Explosive properties	Not considered to be explosive.
Explosive under the influence of a flame	Not considered to be explosive.
Oxidising properties	The mixture itself has not been tested but none of the ingredient substances meet the criteria for classification as oxidising.

9.2. Other information

Volatile organic compound	The product is a complex mixture, the majority of which would not be classed as a VOC. However it cannot be discounted that trace or low levels of VOC's may be present.

SECTION 10: Stability and reactivity

10.1. Reactivity

Reactivity	There are no known reactivity hazards associated with this product.

10.2. Chemical stability

Stability	Stable at normal ambient temperatures and when used as recommended.

10.3. Possibility of hazardous reactions

Possibility of hazardous reactions	Unlikely to occur under normal conditions of use. Unlikely to occur.

10.4. Conditions to avoid

Conditions to avoid	Avoid heat, flames and other sources of ignition.

10.5. Incompatible materials

Materials to avoid	Strong oxidising agents.

10.6. Hazardous decomposition products

Hazardous decomposition Products	Oxides of carbon. Protection against nuisance dust must be used when the airborne concentration exceeds 10 mg/m3.

SECTION 11: Toxicological information

11.1. Information on toxicological effects

Acute toxicity - oral

Acute toxicity oral (LD_{50} mg/kg)	2,000.0
Species	Rat
Notes (oral LD_{50})	Not expected to be highly toxic based on information of ingredients. Based on available data the classification criteria are not met.

Acute toxicity - dermal

Acute toxicity dermal (LD_{50} mg/kg)	2,000.0
Species	Rabbit
Notes (dermal LD_{50})	Not expected to be highly toxic based on information of ingredients. Based on available data the classification criteria are not met.

Acute toxicity - inhalation

Notes (inhalation LC_{50})	Not determined. The product is unlikely to present any significant inhalation hazard at ambient temperatures and under normal conditions of use.

Serious eye damage/irritation

Serious eye damage/irritation	May cause mild, short lasting discomfort to eyes.

Respiratory sensitisation

Respiratory sensitisation	No evidence to suggest the product will be a respiratory sensitiser. Repeated exposure to oil mists may cause respiratory damage.

Skin sensitisation

Skin sensitisation	Not expected to be a skin sensitizer based on information on components.

Carcinogenicity

Carcinogenicity	This product contains mineral oils which are considered to be severly refined and not considered to be carcinogenic under IARC. All of the oils in this product have been demonstrated to contain less than 3% extractables by the IP346 test

Reproductive toxicity

Reproductive toxicity - fertility	No data available to suggest the product will cause reproductive toxicity.

Specific target organ toxicity - single exposure

STOT - single exposure	Based on available data the classification criteria are not met.

Specific target organ toxicity - repeated exposure

STOT - repeated exposure	Based on available data the classification criteria are not met.

Aspiration hazard

Aspiration hazard	Kinematic viscosity > 20.5 mm^2/s. The product viscosity is greater than the upper limit assigned for classification. The product contains mineral oil. If aspirated into the lungs e.g. through vomitting after ingestion admit to hospital immediately.
General information	This product has low toxicity. Only large quantities are likely to have adverse effects on human health.
Inhalation	Unlikely to be hazardous by inhalation because of the low vapour pressure of the product at ambient temperature.
Ingestion	No harmful effects expected from quantities likely to be ingested by accident.
Skin contact	Skin irritation should not occur when used as recommended. Repeated exposure may cause skin dryness or cracking.
Eye contact	May cause temporary eye irritation.
Acute and chronic health hazards	Prolonged or repeated contact with used oil may cause serious skin diseases, such as dermatitis and skin cancer.

SECTION 12: Ecological Information

Ecotoxicity Based on available data the classification criteria are not met. Not regarded as dangerous for the environment.

12.1. Toxicity

Toxicity Based on available data the classification criteria are not met. Not considered toxic to fish.

Acute toxicity – aquatic Invertebrates Based on available data the classification criteria are not met.

12.2. Persistence and degradability

Persistence and degradability The product contains mineral oil which has limited biodegradability in CEC test methods but will biodegrade slowly in aerobic water and sediments and is considered ultimately biodegradable. The product is not readily biodegradable.

Stability (hydrolysis) The product is based on highly refined mineral oils that are considered stable to hydrolysis.

Biodegradation The product is not considered readily biodegradeable, albeit the major constituents are expected to ultimately biodegrade.

Biological oxygen demand Not determined.

Chemical oxygen demand Not determined.

12.3. Bioaccumulative potential

Bioaccumulative potential Bioaccumulation is unlikely to be significant because of the low water-solubility of this product.

Partition coefficient Not determined. log Kow: > 7 The above figure is typical of mineral oil.

12.4. Mobility in soil

Mobility The product is non-volatile. The product is insoluble in water and will spread on the water surface.

Henry's law constant Not determined.

12.5. Results of PBT and vPvB assessment

Results of PBT and vPvB Assessment This product does not contain any substances classified as PBT or vPvB.

12.6. Other adverse effects

Other adverse effects None known.

SECTION 13: Disposal considerations

13.1. Waste treatment methods

General information Waste should be treated as controlled waste. Dispose of waste to licensed waste disposal site in accordance with the requirements of the local Waste Disposal Authority.

Disposal methods Dispose of waste to licensed waste disposal site in accordance with the requirements of the local Waste Disposal Authority.

Waste class European Waste Catalogue = 13 03 10*

SECTION 14: Transport information

General The product is not covered by international regulations on the transport of dangerous goods (IMDG, IATA, ADR/RID).

14.1. UN number

Not applicable.

14.2. UN proper shipping name

Not applicable.

14.3. Transport hazard class(es)

No transport warning sign required.

14.4. Packing group

Not applicable.

14.5. Environmental hazards

Environmentally hazardous substance/marine pollutant

14.6. Special precautions for user

Not applicable.

14.7. Transport in bulk according to Annex II of MARPOL73/78 and the IBC Code

Transport in bulk according to Annex II of MARPOL 73/78 and the IBC Code	Not applicable.

SECTION 15: Regulatory information

15.1. Safety, health and environmental regulations/legislation specific for the substance or mixture

National regulations	Health and Safety at Work etc. Act 1974 (as amended). The Pollution Prevention and Control Act 1999. Special Waste regulations 1996. Control of Pollution (Oil Storage) (England) Regulations 2001 The Chemicals (Hazard Information and Packaging for Supply) Regulations 2009 (SI 2009 No. 716).
EU legislation	Dangerous Preparations Directive 1999/45/EC. Dangerous Substances Directive 67/548/EEC. Regulation (EC) No 1907/2006 of the European Parliament and of the Council of 18 December 2006 concerning the Registration, Evaluation, Authorisation and Restriction of Chemicals (REACH) (as amended). Regulation (EC) No 1272/2008 of the European Parliament and of the Council of 16 December 2008 on classification, labelling and packaging of substances and mixtures (as amended).
Guidance	Workplace Exposure Limits EH40. Safety Data Sheets for Substances and Preparations.

15.2. Chemical safety assessment

No chemical safety assessment has been carried out.

Inventories

Canada - DSL/NDSL
All the ingredients are listed or exempt.

US - TSCA
All the ingredients are listed or exempt.

Australia - AICS
All the ingredients are listed or exempt.

Korea - KECI
All the ingredients are listed or exempt.

China - IECSC
All the ingredients are listed or exempt.

Philippines – PICCS
All the ingredients are listed or exempt.

New Zealand - NZIOC
All the ingredients are listed or exempt.

SECTION 16: Other information

Revision comments	NOTE: Lines within the margin indicate significant changes from the previous revision.
Issued by	Regulatory Affairs
Revision date	26/10/2015
Revision	2
SDS number	21439
Hazard statements in full	H304 May be fatal if swallowed and enters airways. H319 Causes serious eye irritation.

SERVICE RECORD CARD

Model: .....

Engine No: .....

Carried out by E.P.Barrus **Print Name:** **Actual Hours:** PDI **Signed:**	**Boat Builder Stamp:** **Commission of Boat and Hand Over to Customer. (Refer to the Installation Check List Page in this Manual).** **Date:** **Signed:**
Dealer Stamp: **Actual Hours:** 1st **Signed:**	**Dealer Stamp:** **Actual Hours:** 2nd **Signed:**
Dealer Stamp: **Actual Hours:** 3rd **Signed:**	**Dealer Stamp:** **Actual Hours:** 4th **Signed:**
Dealer Stamp: **Actual Hours:** 5th **Signed:**	**Dealer Stamp:** **Actual Hours:** 6th **Signed:**

Please refer to Owner's Manual for service intervals