LONCIN

GENERATORS
LONCIN

Inverter Generators & Generators

LC2000i & 2000i-S / 2000i-110V / LC3000i-230V

	LC2000i / LC2000i-S* - **1.6kW Rated**	LC2000i-S-110v - **1.6kW Rated**	LC3000i-S-230v - **2.3kW Rated**
Engine Type	Single Cylinder, 4 stroke, forced cooling OHV		
Rated Output hp / (kW)	2.1 / (1.6)		3.0 / (2.3)
Bore x Stroke (mm)	48.6 x 43		65 x 45
Displacement (cc)	79		149
Compression Ratio	9 : 1		
Fuel Capacity (L)	4.2		4.5
Fuel Consumption (g/kW h)	≤ 395		
Running Time (h)	7		
Rated Frequency (Hz)	50		
Rated Voltage (V)	230	110	230
Voltage Regulator System	FM-SPWM III		
Rated Output (kW)	1.6		2.3
Max Output (kW)	1.8		2.5
Power Factor	1.0		
DC Voltage (V)	12		
DC Current (A)	8.3		8.0
Starting System	Recoil		
Ignition System	C.D.I		
Noise (≤ 7m)	61dBA		
Dimensions (L x W x H mm)	499 x 285 x 455		
Net Weight (kg)	21		26.5
Oil Capacity (L)	0.35		

*LC2000i-S can be synchronised with additional LC2000i-S inverter

LC3500i / 3500iO / LC7000i

	LC3500i - **3.0kW Rated**	LC3500iO/230V - **3.0kW Rated** LC3500iO/110V - **3.0kW Rated**	LC7000i - **6.0kW Rated**
Engine Type	Single Cylinder, 4 stroke, forced cooling OHV		
Rated Output hp / (kW)	4.0 / (3.0)		8.0 / (6.0)
Bore x Stroke (mm)	70 x 55		90 x 66
Displacement (cc)	212		420
Compression Ratio	8.5 : 1		
Fuel Capacity (L)	10	9	28
Fuel Consumption (g/kW h)	≤ 395		≤ 4.3 litres/h
Running Time (h)	11	9	6.5
Rated Frequency (Hz)	50		50 / 60
Rated Voltage (V)	230	230 / 110	230
Voltage Regulator System	FM-SPWM III		
Rated Output (kW)	3.0	3.0	6.0
Max Output (kW)	3.3	3.3	7.0
Power Factor	1.0		
DC Voltage (V)	12		
DC Current (A)	8		
Starting System	Recoil / electric	Recoil	Recoil / electric
Ignition System	C.D.I		
Noise (≤ 7m)	65dBA	68dBA	86dBA
Dimensions (L x W x H mm)	578 x 440 x 510	480 x 420 x 450	920 x 765 x 773
Net Weight (kg)	45	34	118
Oil Capacity (L)	0.6		1.35

LC2500-AS / LC3000-AS / LC3500-AS

	LC2500-AS - **2kW Rated**	LC3000-AS - **2.3kW Rated**	LC3500-AS - **2.8kW Rated**
Engine Model	G200F/G200FD		G210FA/G210FAD
Engine Type	Single cylinder, 4 stroke, OHV 25˚ inclined, forced air cooling		Single cylinder, 4 stroke, OHV 25˚ inclined, forced air cooling
Net Power hp / (kW)	5.5 / (4.1)		5.9 / (4.4)
Bore x Stroke (mm)	68 x 54		70 x 55
Displacement (cc)	196		212
Compression Ratio	8.5 : 1		8.2 : 1
Oil Capacity (L)	0.6		
Fuel Tank Capacity (L)	18		
Fuel Consumption (g/kw h)	≤ 395		
Approx Running Time (h)	Dependant on load		
Rated Frequency (Hz)	50		
Rated Voltage (V)	110 / 230		
Voltage Regulator System	Automatic voltage regulation		
Sockets	2 x 16 amp		
Rated Output (kW)	2	2.3	2.8
Max Output (kW)	2.2	2.5	3.1
Power Factor	1.0		
DC Charging Voltage (V)	12 (DC)		
DC Charging Current (A)	8.3 (DC)		
Starting System	Recoil		
Ignition System	Transistorized magneto		
Noise (≤ 7m)	76dBA		
Dimensions (L x W x H mm)	590 x 430 x 467		
Net Weight (kg)	40	44	47

LC6500D-AS / LC8000D-AS / LC10000D-AS

	LC6500D-A - **5kW Rated**	LC8000D-A - **6kW Rated**	LC10000D-A - **7.3kW Rated**
Engine Model	G390F/G390FD	G420F/G420FD	LC193F/LC193FD
Engine Type	Single cylinder, 4 stroke, OHV 25° inclined, forced air cooling		
Net Power hp / (kW)	11 / (8.2)	12 / (9.0)	13.4 / (10.0)
Bore x Stroke (mm)	88 x 64	90 x 66	92 x 69
Displacement (cc)	389	420	459
Compression Ratio	8.0 : 1	8.3 : 1	8.8 : 1
Oil Capacity (L)	1.1		
Fuel Tank Capacity (L)	25		
Fuel Consumption (g/kW h)	≤ 374		≤ 400
Approx Running Time (h)	9	8	
Rated Frequency (Hz)	50		
Rated Voltage (V)	110 V / 230 V		
Voltage Regulator System	Automatic voltage regulation		
Sockets	3 x 32 amp		
Rated Output (kW)	5.0	6.0	7.3
Max Output (kW)	5.5	7.5	8.0
Power Factor	1.0		
DC Charging Voltage (V)	12 (DC)		
DC Charging Current (A)	8.3 (DC)		
Starting System	Recoil / Electric start		
Ignition System	Transistorized magneto		
Noise (≤ 7m)	76dBA		78dBA
Dimensions (L x W x H mm)	681 x 546 x 550		
Net Weight (kg)	79	87	88

Typical Power Rating

1000 watts = 1.0 kW 1.25kVA = 1.0kW

Electrical Equipment	Approx wattage
Air Con 1hp	2500
Angle Grinder 125 mm	1100
Angle Grinder 230 mm	2200
Belt Sander	1100
Cement Mixer (Small)	1500
Central Heating Pump	800
Chainsaw	1600
Concrete Poker	2500
Cooker	12000 (minimum)
Computer and VDU	700
Coffee Machine	1300
Dehumidifier	3000
Deep Freeze	1500
Demolition Breaker	2400
Dishwasher	2000 - 3000
Fan Heater (2 bar)	2000
Fax Machine	600
Flood Light TH	500
Flood Light MH	1000
Fluorescent Tube	60
Floor Sander (200mm)	2000
Food Mixer	500
Fridge	700 - 1000
Hair Dryer	1500 - 2300
Hair Straighteners	150
Hammer Drill	1000
Hedge Trimmer	600
Hi-Fi	300
Hot Air Gun	3000

Electrical Equipment	Approx wattage
Iron	1000
Iron (Steam)	2200
Jigsaw	600
Kettle	2500 - 3000
Lawnmower	600 - 1200
Lawn Raker	500
Light Bulb (Domestic std)	25 - 100
Microwave 900W	1500
Orbital Sander	500
Planer	1000
Power Drill	500 - 900
Power Float	1500
Photocopier	1500
Pressure Washer	3000 - 6000
Printer	400
Radiator (Oil Filled)	1000 - 2000
Router	1600 - 1900
Saw (Chain)	1500
Saw 250mm (Masonry)	4000
Saw (Mitre)	1600
SAT / Cable TV Receiver	25
Strimmer	500
Television	200
Toaster	1050 - 1500
Treadmill (Domestic)	2300
Tumble Dryer	2500
Vacuum Cleaner	1000 - 1300
Washing Machine	4000
Water Heater	3000

Electric Motors	Running	Starting Watts
0.25 hp Motor	250	800
0.50 hp	500	1600
0.75 hp	750	2300
1.00 hp	1000	3000
1.50 hp	1500	4500
2.00 hp	2000	6000

This is an approximate guide only. Please consult the equipment manufacturer for precise wattage.
If in doubt, select next largest generator.

PUMPS

LONCIN

Water Pumps, Chemical Pumps & Semi Trash Pumps

Water Pumps

Why do you need a water pump?

Water pumps are a useful tool for a variety of residential, light commercial and agricultural tasks. A water pump is ideal for:

- Draining water from a basement
- Draining and filling your swimming pool, pond or hot tub
- Draining shallow flooded areas
- Irrigation purposes for agricultural or lawn sprinkling
- Distributing fertilizers and pesticides
- Various other tasks including construction purposes

How do I choose the right pumps for my needs?

When shopping for a water pump there are various items to consider. All water pumps are measured in discharge capacity (GPM), vertical suction lift, and maximum head lift.

Discharge Capacity is the rate of speed that water flows from the source to the discharge point, measured in litres per minute. It provides the power to move water quickly.

Vertical Suction Lift is the vertical distance from the water source to the pump. This is important for draining a basement or deep pond.

Maximum Head Lift is the total height from the source of the water to the destination or drainage point. This provides the power to move water over a distance.

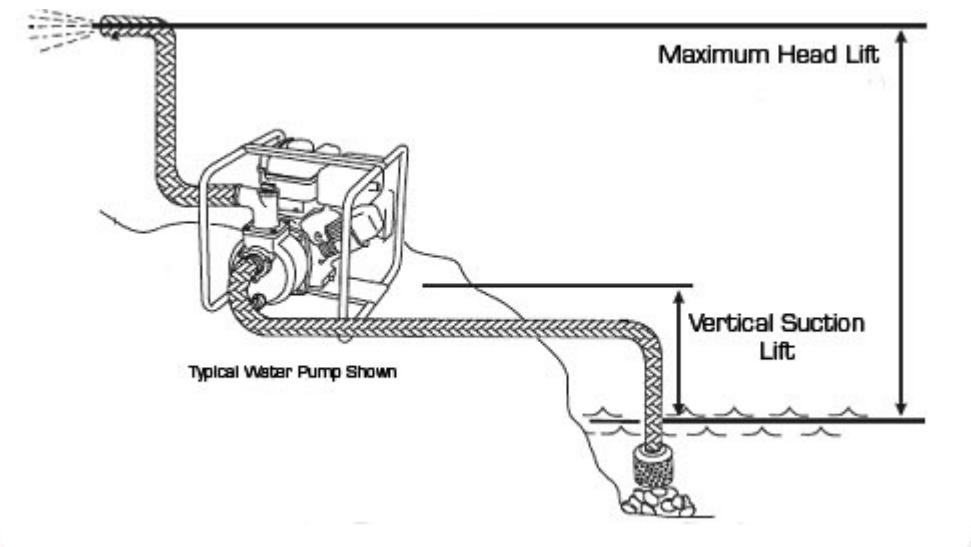

1" General Pump & 2" General Pump

	LC25ZB21-1.2Q - 1"	LC50ZB23-3.1Q - 2"
Pump Dia. of Discharge Port (mm)	25	50
Dia. of Suction Port (mm)	25	50
Lift (m)	21	23
Delivery Volume (litres/h)	8,000	30,000
Suction (m)	6	
Engine Engine Model	LC152F	G160F
Displacement (cc)	97	163
Net Power (hp)	1.6	4.8
Rated Speed (rpm)	3600	3600
Dimensions (mm)	380 x 300 x 370	550 x 430 x 390
Net Weight (kg)	13	23

3" General Pump & 2" High Lift Pump

	LC80ZB35-4.5Q - 3"	LC50ZB60-4.5Q - 2"
Pump Dia. of Discharge Port (mm)	80	50
Dia. of Suction Port (mm)	80	50
Lift (m)	35	60
Delivery Volume (litres/h)	60,000	30,000
Suction (m)	6	
Engine Engine Model	G200F	
Displacement (cc)	196	
Net Power (hp)	5.5	
Rated Speed (rpm)	3600	
Dimensions (mm)	550 x 430 x 470	520 x 415 x 460
Net Weight (kg)	28	30.5

3" Semi Trash Pump

	LC80WB30-4.5Q
Pump Dia. of Discharge Port (mm)	80
Dia. of Suction Port (mm)	80
Lift (m)	30
Delivery Volume (litres/h)	45,000
Suction (m)	6
Engine Engine Model	G200F
Displacement (cc)	196
Net Power (hp)	5.5
Rated Speed (rpm)	3600
Dimensions (mm)	590 x 480 x 440
Net Weight (kg)	39

2" Chemical Pump

	LC50HZB23-3.1Q
Pump Dia. of Discharge Port (mm)	50
Dia. of Suction Port (mm)	50
Lift (m)	23
Delivery Volume (litres/h)	35,000
Suction (m)	6
Engine Engine Model	G160F
Displacement (cc)	163
Net Power (hp)	4.8
Rated Speed (rpm)	3600
Dimensions (mm)	550 x 430 x 470
Net Weight (kg)	25

General Pump Flow Chart

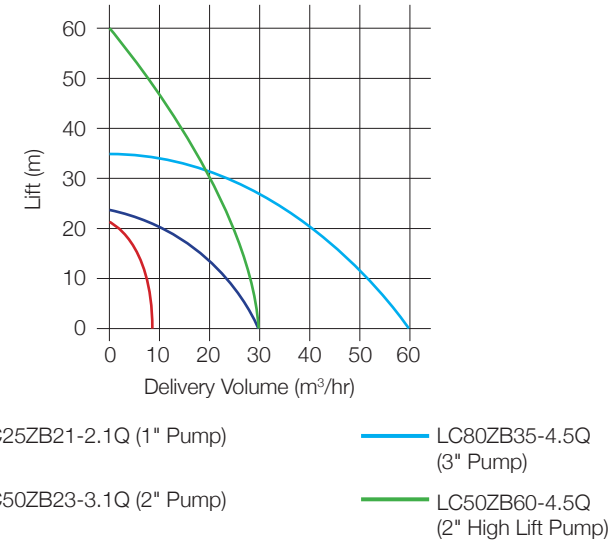

Semi Trash / Chemical Pump Flow Chart

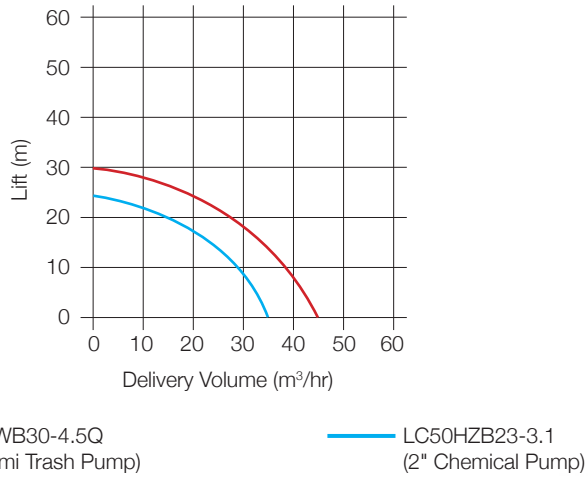

Pump Accessories

FOOTVALVES
For use with standard water pumps only

ENGINES LONCIN

Vertical Engines

11.6hp LC1P88FA

Engine Model	LC1P88FA
Engine Type	Single cylinder, 4-stroke, forced air cooling, OHV
Net Power (hp / kW)	11.6 / 8.7 @ 3600 r/min
Net Torque (Nm)	24 @ 2600 r/min
Shaft Size	25.4 mm / 1"
Bore x Stroke (mm)	88 x 68
Displacement (cc)	413
Compression Ratio	8.7 : 1
Fuel Consumption (g/kw h)	≤ 395
Idle Speed	1850 ± 150
Starting System	Electric start
Dimensions (L x W x H mm)	432 x 388 x 300
Net Weight (kg)	31

Bottom View

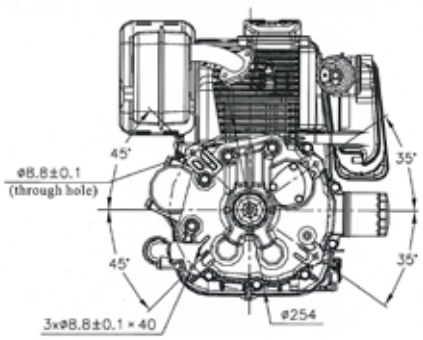

Top View

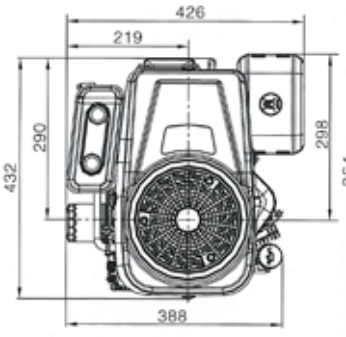

Side View

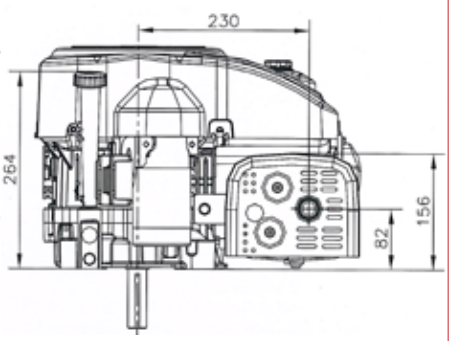

1'' shaft

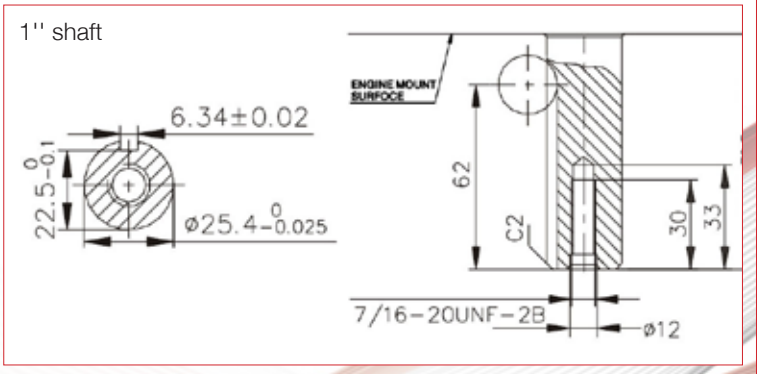

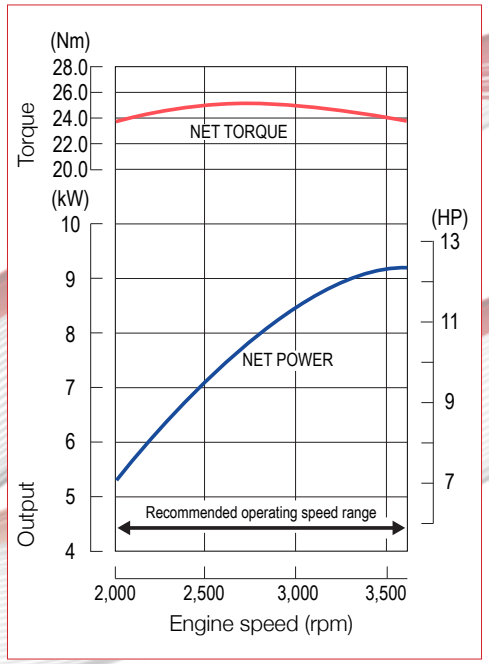

19.3hp LC2P80F

Engine Model	LC2P80F
Engine Type	V-twin, 4-stroke, OHV, forced air cooling
Net Power (hp / kW)	19.3 / 14.4 @ 3600 r/min
Gross Power (hp / kW)	25 / 18.65 @ 3600 r/min
Net Torque (Nm)	48 @ 2400 r/min
Shaft Size	25.4 mm / 1"
Bore x Stroke (mm)	80 x 76
Displacement (cc)	764
Compression Ratio	8.7 : 1
Fuel Consumption (g/kw h)	≤ 379
Idle Speed	1650 ± 100
Starting System	Electric start
Dimensions (L x W x H mm)	466 x 480 x 356
Net Weight (kg)	42

Bottom View

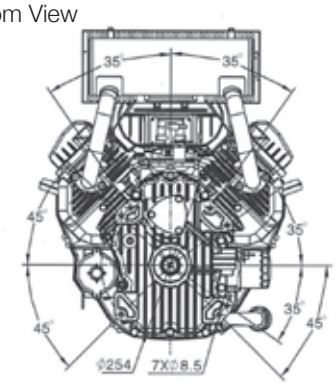

Front View

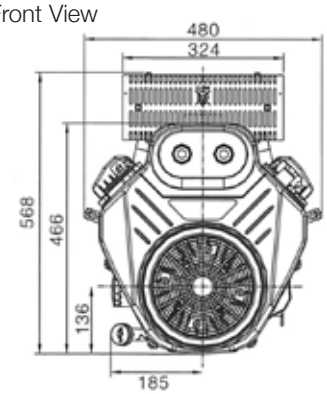

Side View

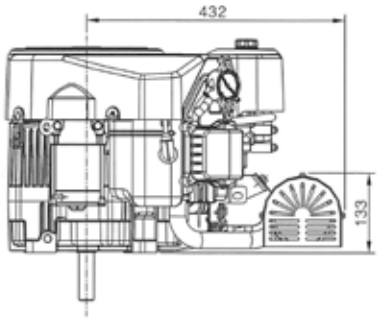

1'' shaft

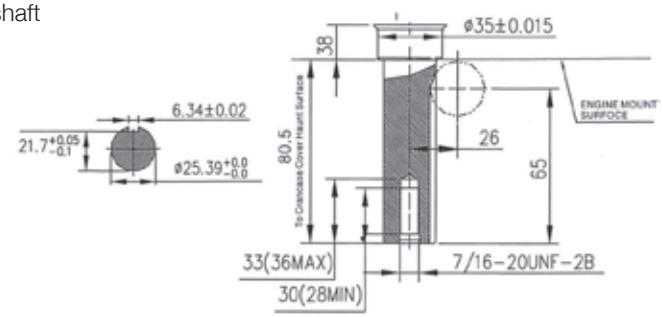

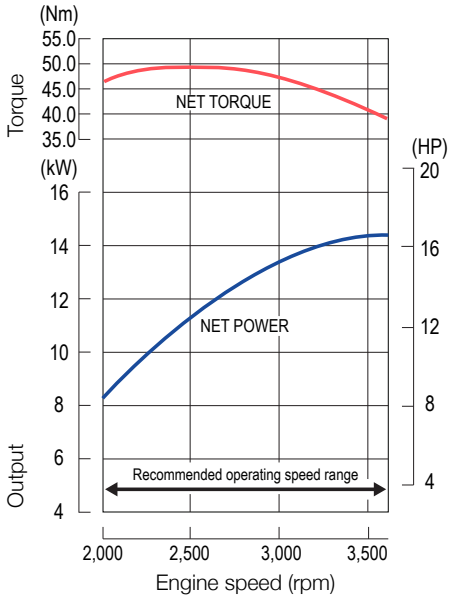

ENGINES LONCIN

Horizontal Engines

1.8hp LC152F-1

Engine Model	LC152F-15
Engine Type	Single cylinder, 4-stroke, OHV, forced air cooling
Net Power (hp / kW)	2.1 / 1.6 @ 3600 r/min
Gross Power (hp / kW)	2.8 / 2.1 @ 3600 r/min
Net Torque (Nm)	4.5 @ 3000 r/min
Bore x Stroke (mm)	54 x 38
Displacement (cc)	87
Compression Ratio	8.0 : 1
Oil Capacity (L)	0.45
Fuel Consumption (g/kw h)	≤ 450
Oil Consumption (g/kw h)	≤ 6.8
Idle Speed	1700 ± 150
Starting System	Recoil
Noise (≤ 7m)	70dBA
Dimensions (L x W x H mm)	310 x 260 x 305
Net Weight (kg)	9

Please refer to LC154 drawing for LC152F-15 dimensions

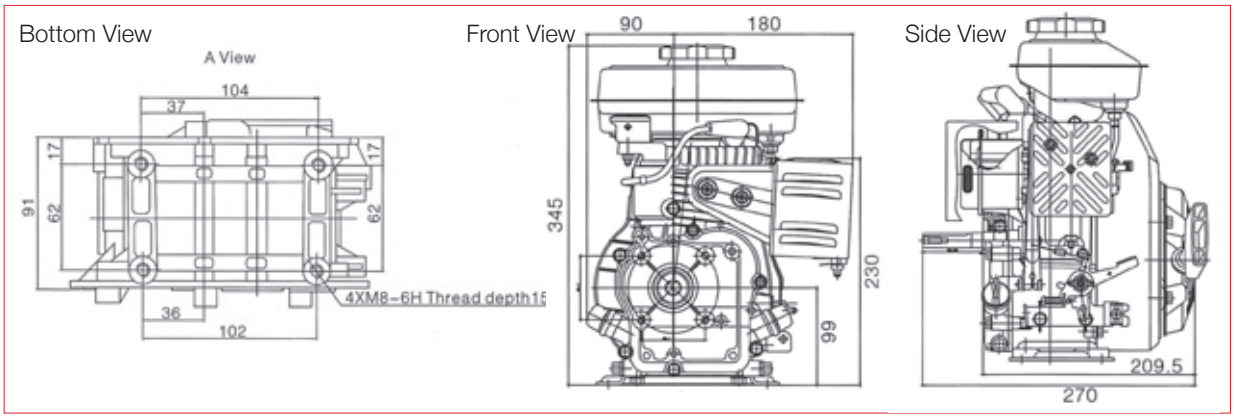

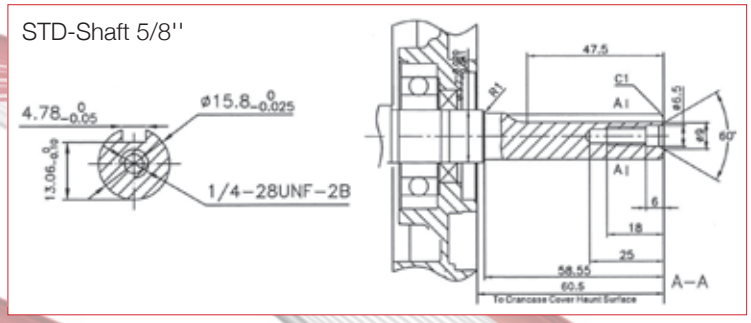

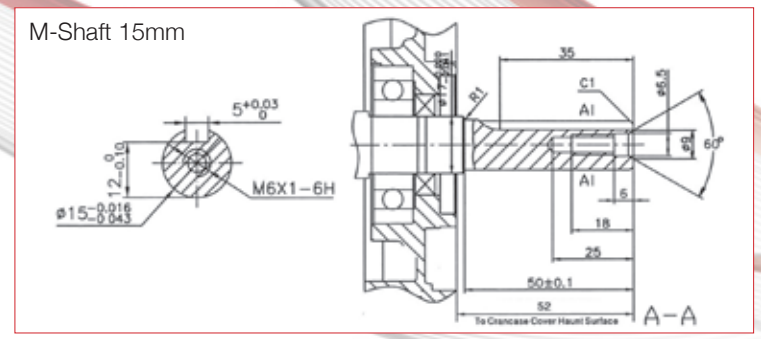

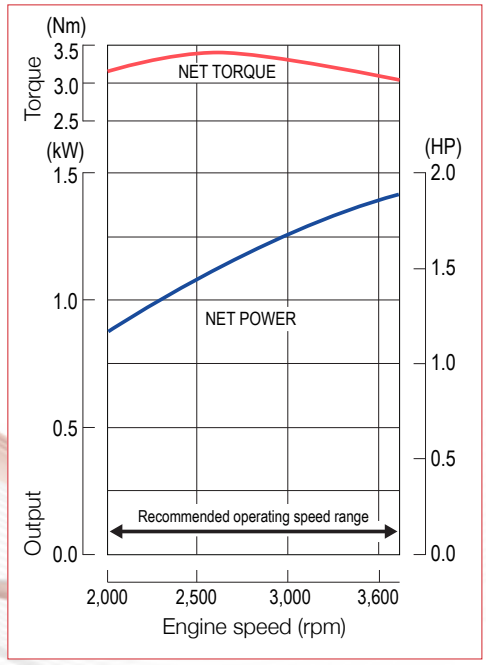

2.1hp LC154F

Engine Model	LC154F
Engine Type	Single cylinder, 4-stroke, OHV, forced air cooling
Net Power (hp / kW)	2.1 / 1.6 @ 3600 r/min
Gross Power (hp / kW)	2.8 / 2.1 @ 3600 r/min
Net Torque (Nm)	4.5 @ 3000 r/min
Bore x Stroke (mm)	54 x 38
Displacement (cc)	87
Compression Ratio	8.0 : 1
Oil Capacity (L)	0.45
Fuel Consumption (g/kw h)	≤ 450
Oil Consumption (g/kw h)	≤ 6.8
Idle Speed	1700 ± 150
Starting System	Recoil
Noise (≤ 7m)	70dBA
Dimensions (L x W x H mm)	310 x 260 x 305
Net Weight (kg)	9

Dimensions can also be used for LC152F-15

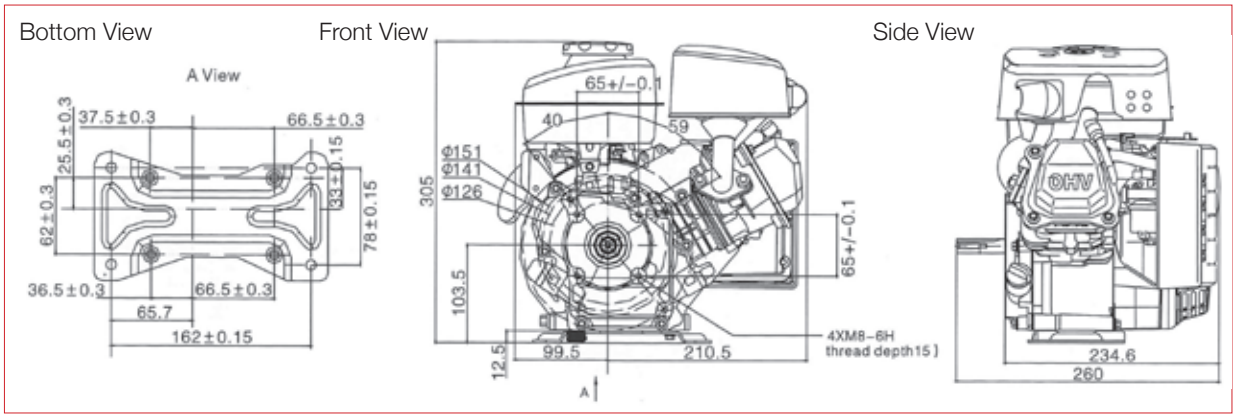

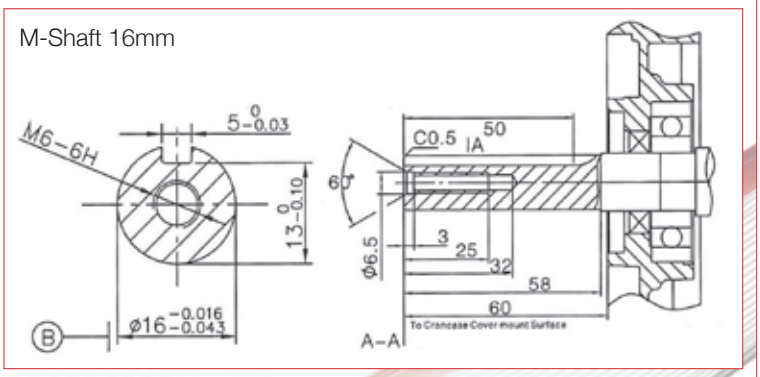

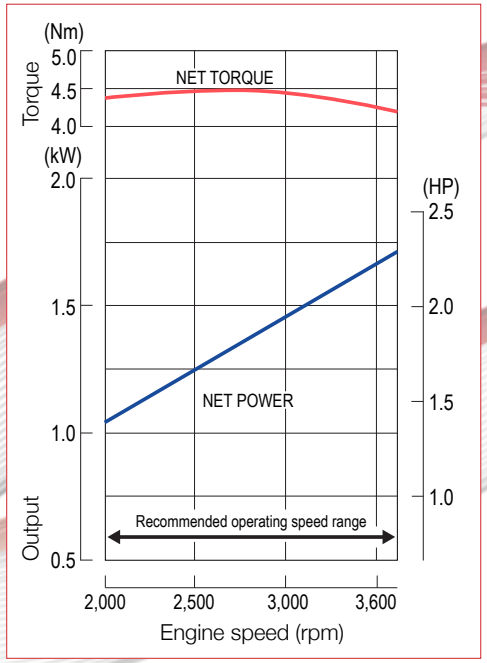

4.8hp G160F

Engine Model	G160F
Engine Type	Single cylinder, 4-stroke, OHV, forced air cooling
Net Power (hp / kW)	4.8 / 3.6 @ 3600 r/min
Gross Power (hp / kW)	5.5 / 4.1 @ 3600 r/min
Net Torque (Nm)	10.3 @ 2500 r/min
Bore x Stroke (mm)	68 x 45
Displacement (cc)	163
Compression Ratio	8.5 : 1
Oil Capacity (L)	0.6
Fuel Consumption (g/kw h)	≤ 395
Oil Consumption (g/kw h)	≤ 6.8
Idle Speed	1450 ± 150
Starting System	Recoil
Noise (≤ 7m)	70dBA
Dimensions (L x W x H mm)	362 x 312 x 335
Net Weight (kg)	15

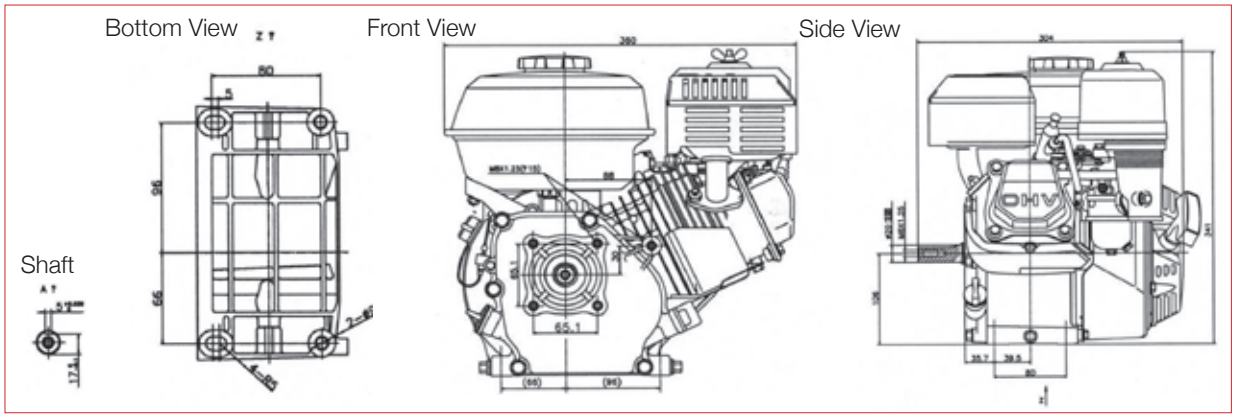

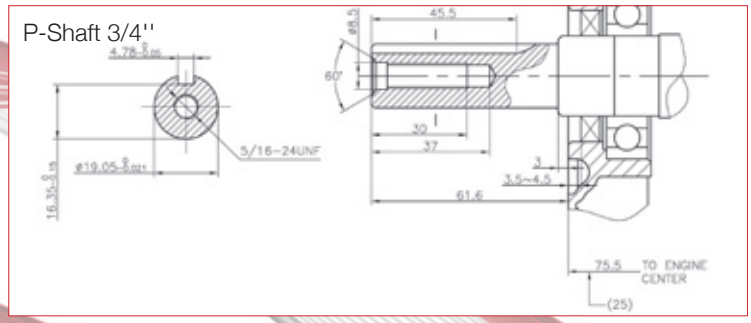

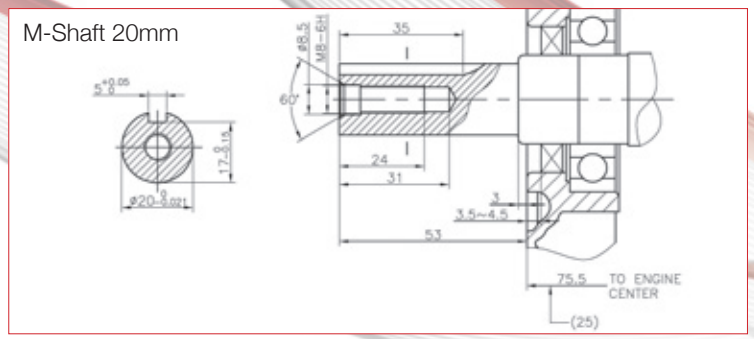

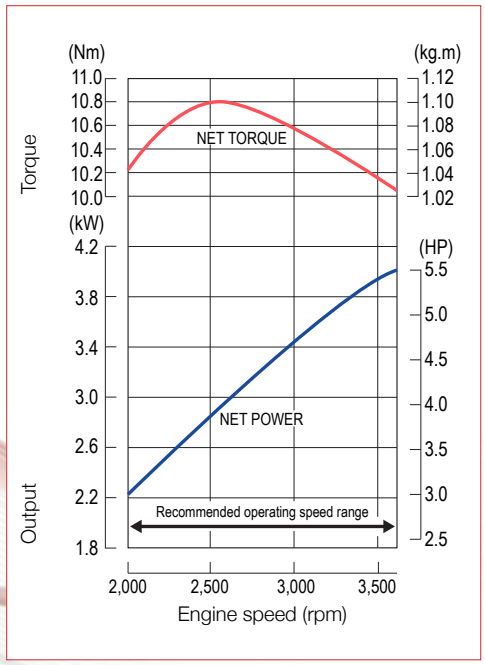

5.5hp G200F

Engine Model	G200F
Engine Type	Single cylinder, 4-stroke, OHV, forced air cooling
Net Power (hp / kW)	5.5 / 4.1 @ 3600 r/min
Gross Power (hp / kW)	6.5 / 4.85 @ 3600 r/min
Net Torque (Nm)	12.4 @ 2500 r/min
Bore x Stroke (mm)	68 x 54
Displacement (cc)	196
Compression Ratio	8.5 : 1
Oil Capacity (L)	0.6
Fuel Consumption (g/kw h)	≤ 395
Oil Consumption (g/kw h)	≤ 6.8
Idle Speed	1450 ± 150
Starting System	Recoil / Electric start optional
Noise (≤ 7m)	70dBA
Dimensions (L x W x H mm)	376 x 312 x 335
Net Weight (kg)	16

Bottom View

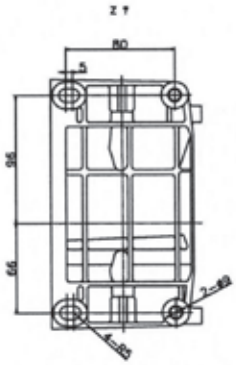

Front View

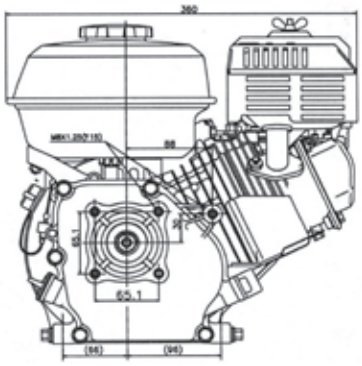

Side View

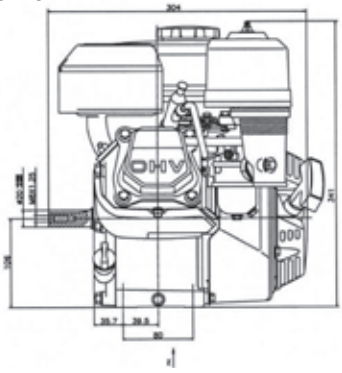

P-Shaft 3/4''

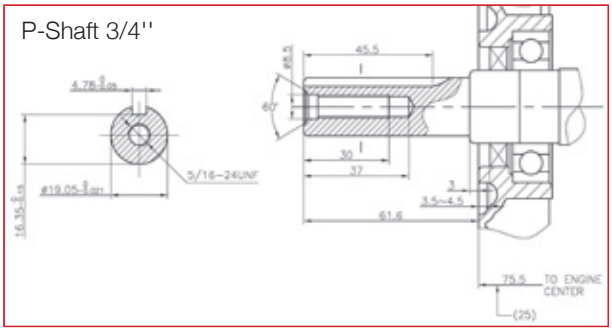

G-Shaft

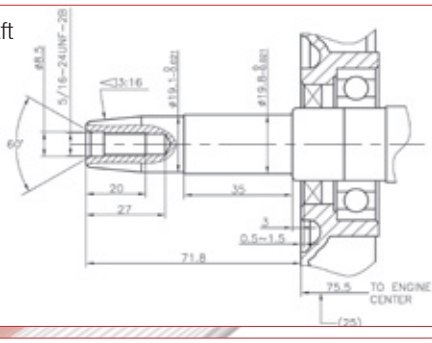

M-Shaft 20mm

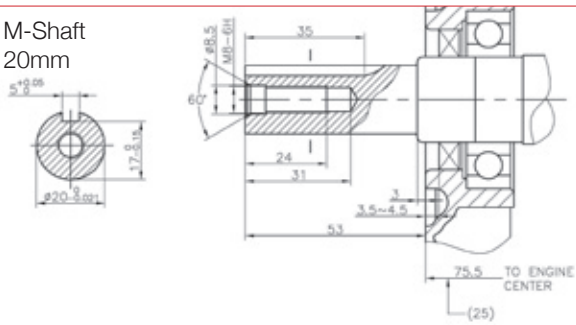

Power Curves

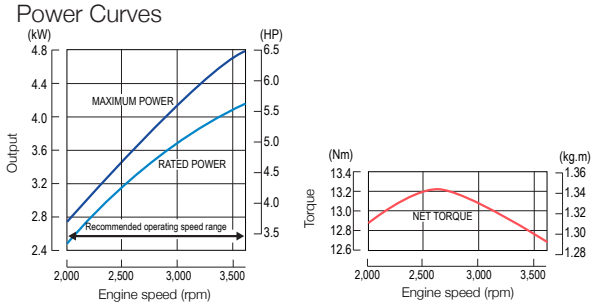

5.9hp G210F

Engine Model	G210FA
Engine Type	Single cylinder, 4-stroke, OHV, forced air cooling
Net Power (hp / kW)	5.9 / 4.4 @ 3600 r/min
Gross Power (hp / kW)	6.9 / 5.1 @ 3600 r/min
Net Torque (Nm)	12.5 @ 2500 r/min
Bore x Stroke (mm)	70 x 55
Displacement (cc)	212
Compression Ratio	8.5 : 1
Oil Capacity (L)	0.6
Fuel Consumption (g/kw h)	≤ 395
Oil Consumption (g/kw h)	≤ 6.8
Idle Speed	1800 ± 150
Starting System	Recoil
Noise (≤ 7m)	70 dBA
Dimensions (L x W x H mm)	325 x 381 x 327
Net Weight (kg)	19

Bottom View

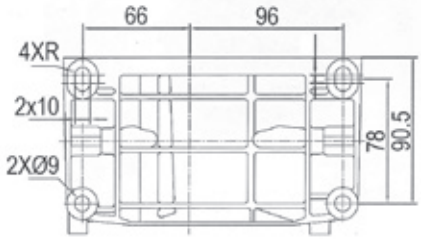

Rear View

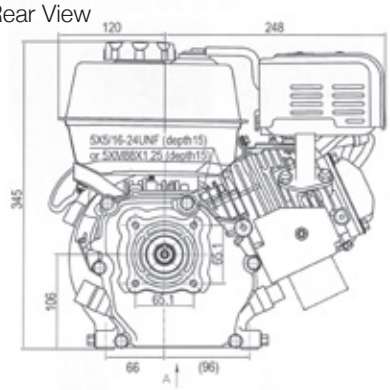

Side View

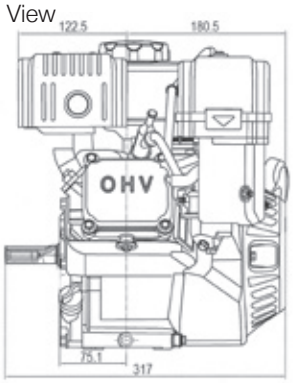

P-Shaft 3/4''

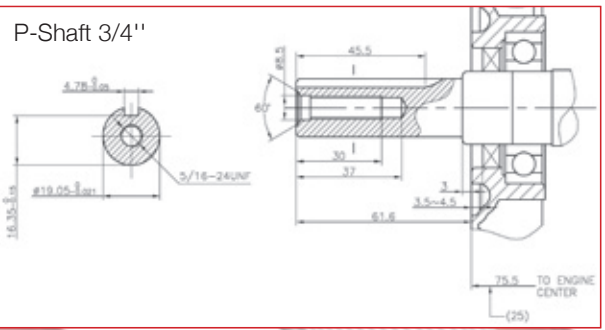

G-Shaft

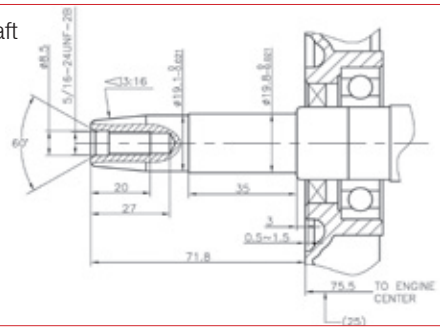

M-Shaft 20mm

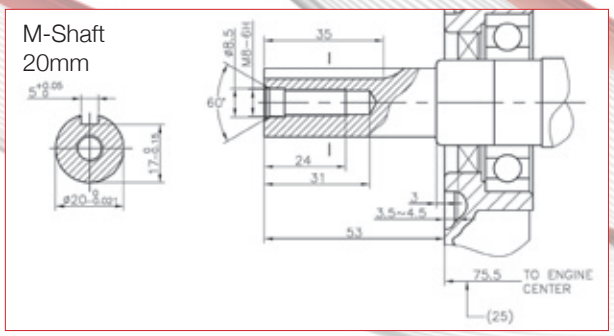

Power Curves

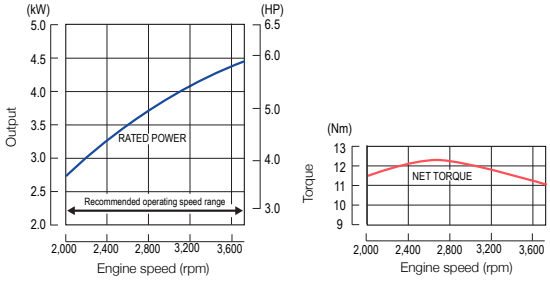

8hp G270F

Engine Model	G270F
Engine Type	Single cylinder, 4-stroke, OHV, forced air cooling
Net Power (hp / kW)	8.0 / 6.0 @ 3600 r/min
Gross Power (hp / kW)	9.0 / 6.7 @ 3600 r/min
Net Torque (Nm)	16.3 @ 2500 r/min
Bore x Stroke (mm)	77 x 58
Displacement (cc)	270
Compression Ratio	8.1 : 1
Oil Capacity (L)	0.95
Fuel Consumption (g/kw h)	≤ 374
Oil Consumption (g/kw h)	≤ 6.8
Idle Speed	1450 ± 150
Starting System	Recoil / Electric start optional
Noise (≤ 7m)	70dBA
Dimensions (L x W x H mm)	430 x 380 x 410
Net Weight (kg)	25

Bottom View

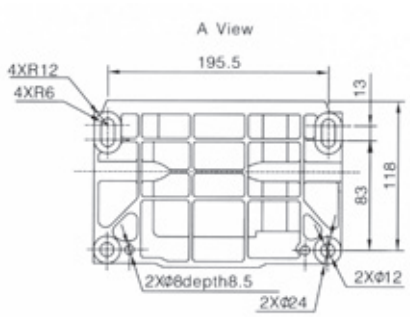

Top View

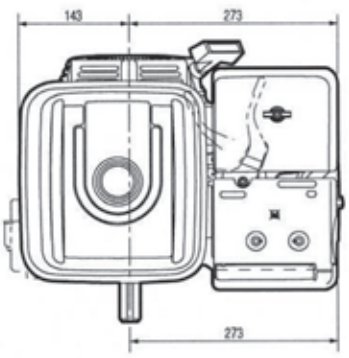

Side View

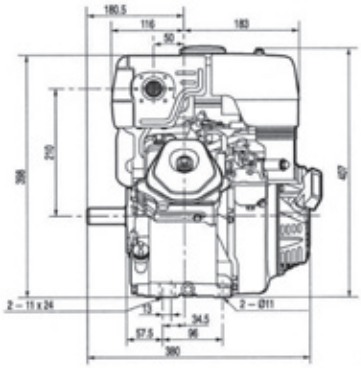

P-Shaft 1"

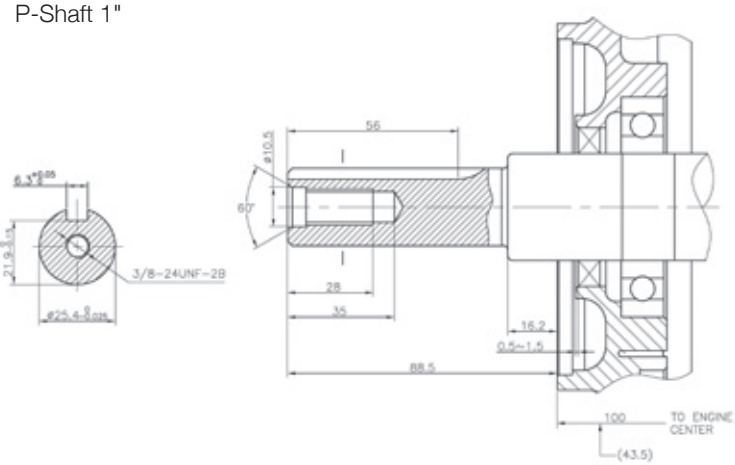

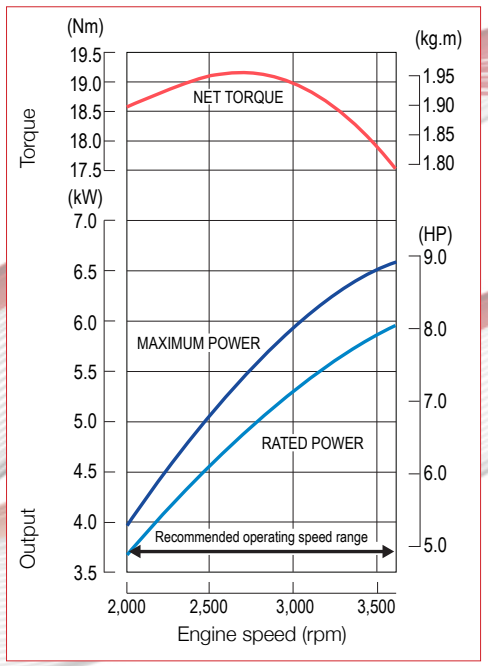

11hp G390F

Engine Model	G390F
Engine Type	Single cylinder, 4-stroke, OHV, forced air cooling
Net Power (hp / kW)	11 / 8.2 @ 3600 r/min
Gross Power (hp / kW)	13 / 9.7 @ 3600 r/min
Net Torque (Nm)	25.1 @ 2500 r/min
Bore x Stroke (mm)	88 x 64
Displacement (cc)	389
Compression Ratio	8 : 1
Oil Capacity (L)	1.1
Fuel Consumption (g/kw h)	≤ 374
Oil Consumption (g/kw h)	≤ 6.8
Idle Speed	1450 ± 150
Starting System	Recoil / Electric start optional
Noise (≤ 7m)	70dBA
Dimensions (L x W x H mm)	450 x 405 x 443
Net Weight (kg)	31

Front View

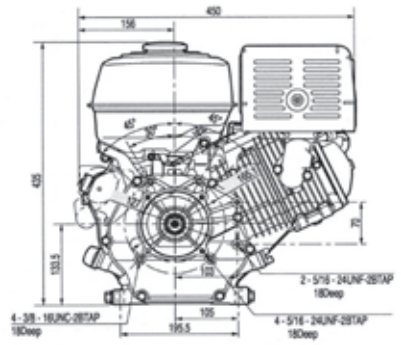

Bottom View

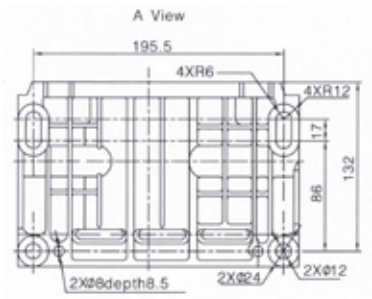

Side View

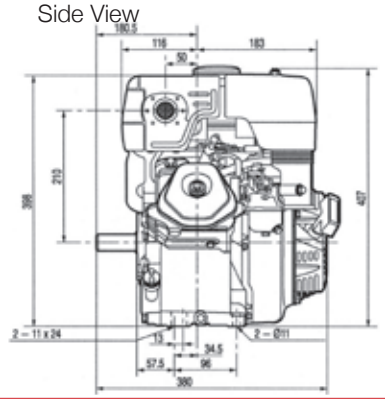

P-Shaft 1''

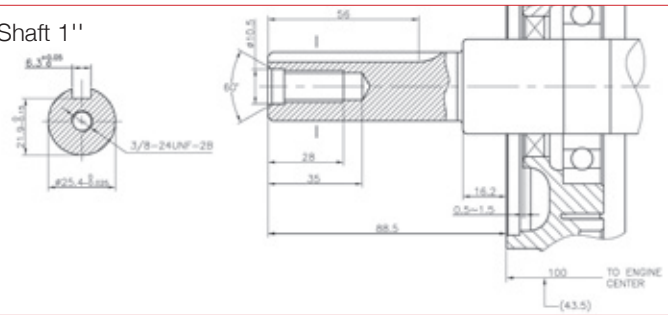

G-Shaft

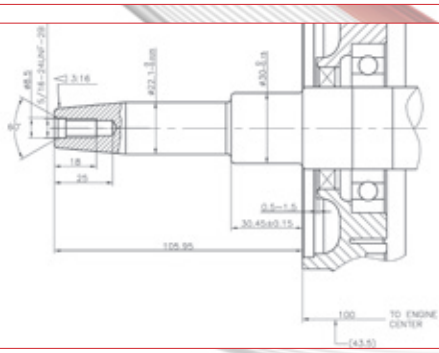

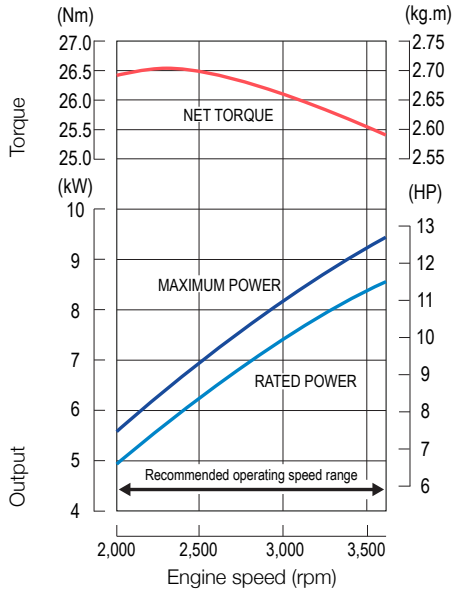

12hp G420F

Engine Model	G420F
Engine Type	Single cylinder, 4-stroke, OHV, forced air cooling
Net Power (hp / kW)	12 / 9 @ 3600 r/min
Gross Power (hp / kW)	15 / 11.2 @ 3600 r/min
Net Torque (Nm)	26.5 @ 2500 r/min
Bore x Stroke (mm)	90 x 66
Displacement (cc)	420
Compression Ratio	8.3 : 1
Oil Capacity (L)	1.1
Fuel Consumption (g/kw h)	≤ 374
Oil Consumption (g/kw h)	≤ 6.8
Idle Speed	1450 ± 150
Starting System	Recoil / Electric start optional
Noise (≤ 7m)	70dBA
Dimensions (L x W x H mm)	450 x 405 x 443
Net Weight (kg)	31

Front View

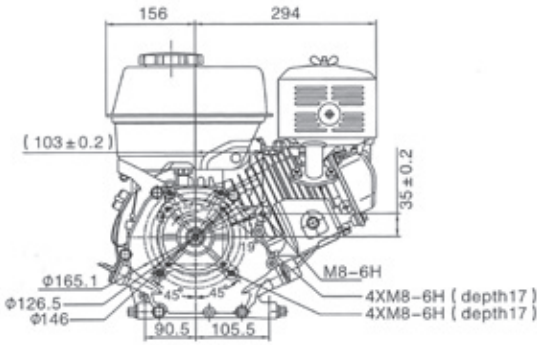

Side View

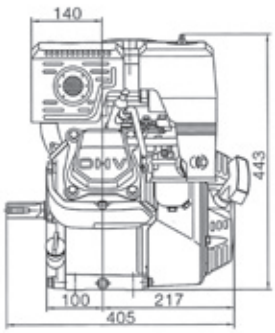

Bottom View

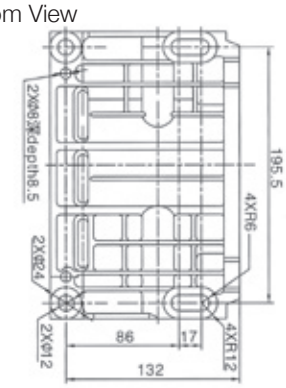

P-Shaft 1''

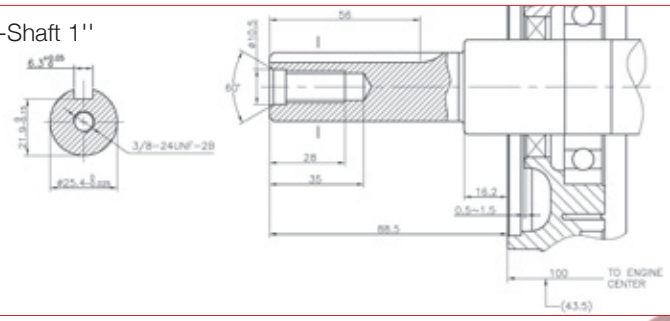

G-Shaft

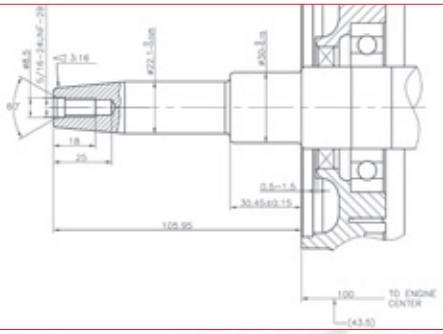

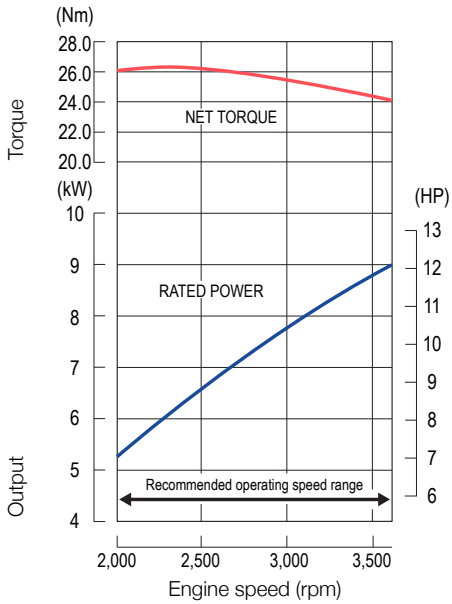

19.7hp V-Twin

Engine Model	LC2V78FD-1
Engine Type	V-Twin, 4-stroke, OHV, forced air cooling
Net Power (hp / kW)	19.7 / 14.7 @ 3600 r/min
Gross Power (hp / kW)	22 / 16.4 @ 3600 r/min
Net Torque (Nm)	43.5 @ 2500 r/min
Bore x Stroke (mm)	78 x 71
Displacement (cc)	678
Compression Ratio	8.5 : 1
Oil Capacity (L)	1.5
Fuel Consumption (g/kw h)	≤ 360
Idle Speed	1500 ± 150
Starting System	Electric
Dimensions (L x W x H mm)	510 x 400 x 450
Net Weight (kg)	43

Front View

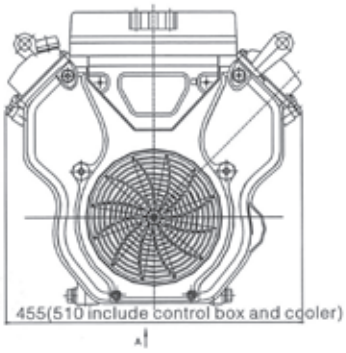

Side View

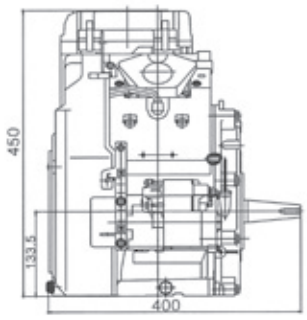

Bottom View

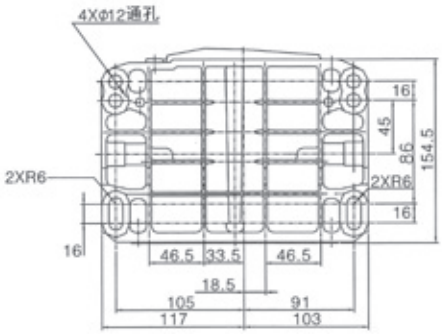

P-Shaft 1''

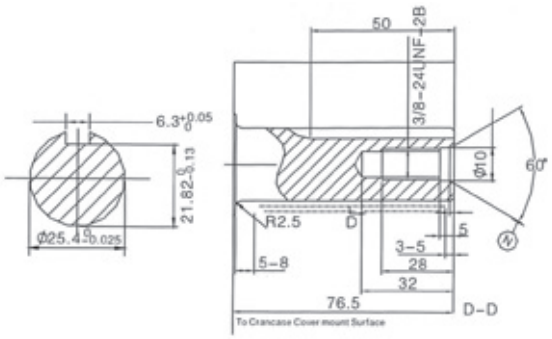

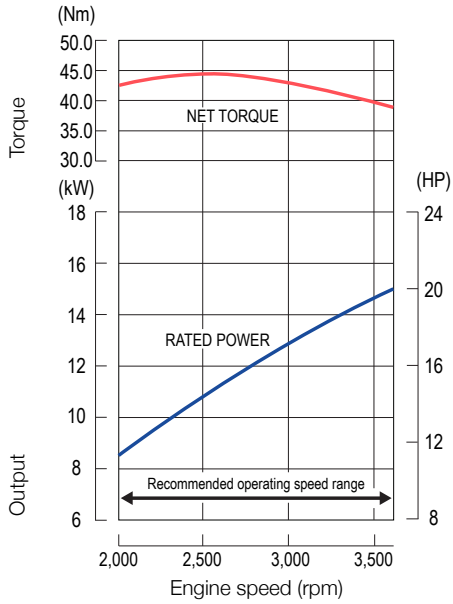

29.5hp V-Twin

Engine Model	LC2V90FD-1
Engine Type	V-Twin, 4-stroke, OHV, forced air cooling
Net Power (hp / kW)	29.5 / 22 @ 3600 r/min
Net Torque (Nm)	70 @ 2500 r/min
Bore x Stroke (mm)	90 x 78.5
Displacement (cc)	999
Compression Ratio	8.5 : 1
Oil Capacity (L)	2.5
Fuel Consumption (g/kw h)	
Idle Speed	1800 ± 150
Starting System	Electric start
Dimensions (L x W x H mm)	555 x 567 x 685
Net Weight (kg)	60

Front View

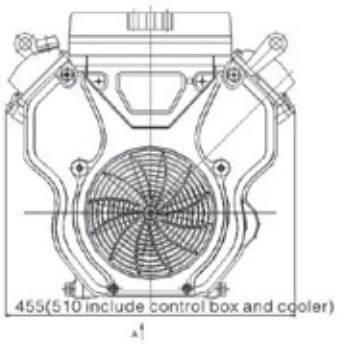

Side View

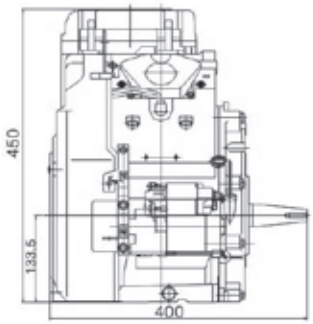

Bottom View

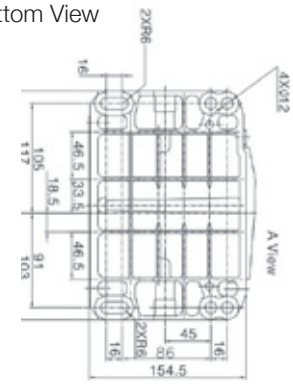

G-Shaft

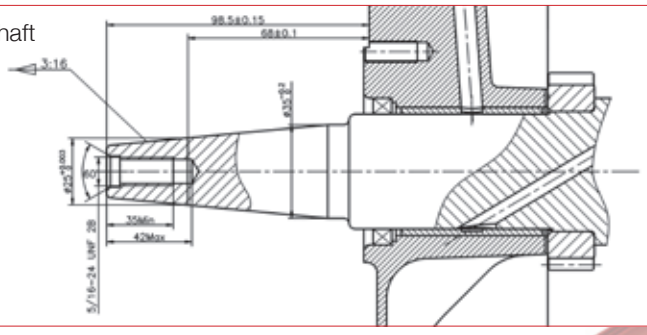

P- Shaft

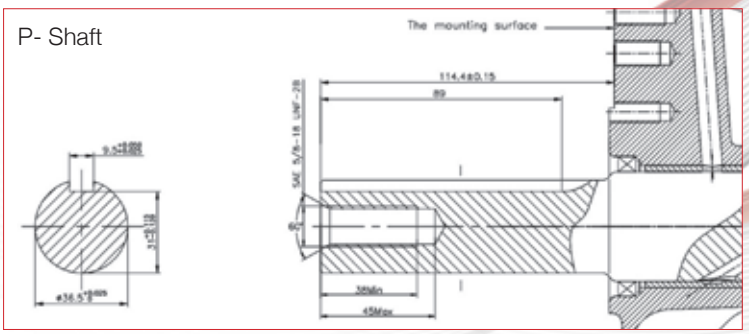

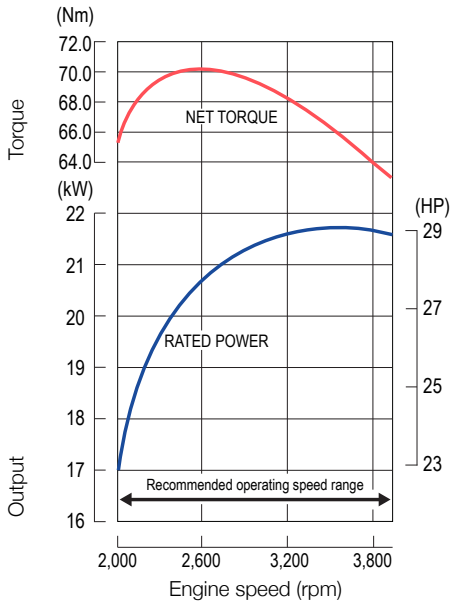

Think Petrol, Think Repower, Think Loncin

The Loncin Engine Series offers a cost effective option for the repower market.

- Horizontal shaft engines from 1.8 hp to 12 hp
- Vertical engines from 3.6 hp to 4.8 hp
- V-Twin 29.5 hp horizontal and 19.3 hp vertical engines

Features and Benefits

- Durable
- High performance
- Electric start optional
- Low noise
- Fuel efficient
- Standard engine drive shafts
- Standard mounting points

Construction

Cement Mixers

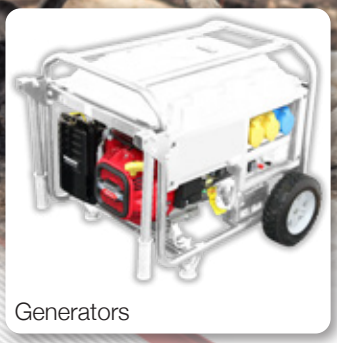

Generators

Plant and Tool

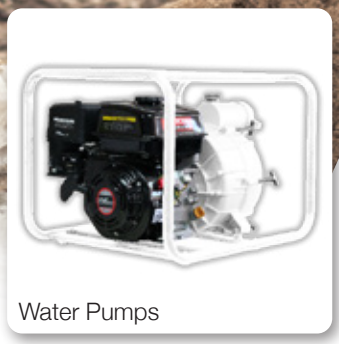

Water Pumps

Vibration Plate

Ground Care / Utility

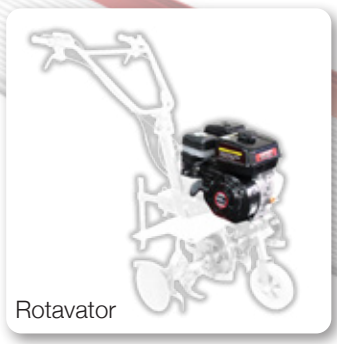

Rotavator

Pressure Washers

Leisure

Buggies

Go-Kart

International Cooperation

Motorcycle cooperation with BMW since 2005 offers Loncin a very advanced quality control system. Loncin also have ODM cooperation with well-known international companies.

BMW

BLACK & DECKER

ROVER

GLOBAL GARDEN PRODUCTS

TORO

Toyama Power Products

KÄRCHER

makes a difference

DEWALT

Cummins Power Generation

TURF MECH

SPERONI WATER PUMPS

Husqvarna

Honeywell

AL-KO

GENERAC

BRANCO

TWO YEAR WARRANTY ON ALL LONCIN PRODUCTS

100 BARRUS YEARS

The Power Behind The Brands

Specifications and/or prices are subject to change without notice.
Every effort is made to produce sales literature and price lists that are accurate and current.

Loncin - Supported by Barrus
E. P. Barrus Ltd., Glen Way, Launton Road, Bicester, Oxfordshire, OX26 4UR
Tel: 01869 363606 Email: loncin@barrus.co.uk www.barrus.co.uk

Doc No. 06/2021