ORIGINAL INSTRUCTION

SHIRE CANAL ENGINE MANUAL

For the following engine models:

Shire 90

RDG603A23 – Issue 17

SAFETY

E.P. Barrus is concerned for your safety. We use safety statements throughout the manual to call your attention to the potential hazards associated with the operation of your Shire engine.

Follow the precautions listed throughout the manual before operation, during operation and during servicing/maintenance procedures for your safety, the safety of others and to protect the performance of your engine.

Safety alert symbol appears throughout the manual. It means attention, be alert as your safety is involved. Please read and follow the message that appears after the safety alert symbol.

NOTICE:	This indicates a situation which can cause damage to the machine, personal property and/or the environment or cause the equipment to operate improperly
CAUTION:	This indicates a hazardous situation which, if not avoided, could result in minor or moderate injury.
WARNING:	This indicates a hazardous situation which, if not avoided, could result in death or serious injury.
DANGER:	This indicates a hazardous situation which, if not avoided, will result in death or serious injury.

Engine Details

Engine Serial Number:	

Please enter your engine serial number in the space provided above. Please quote the engine identification number during any enquiry or when ordering spare parts. Information about the engine serial number and its location on the engine can be found in **SECTION 2** of the manual.

Shire Engine Manuals and Shire Parts Books

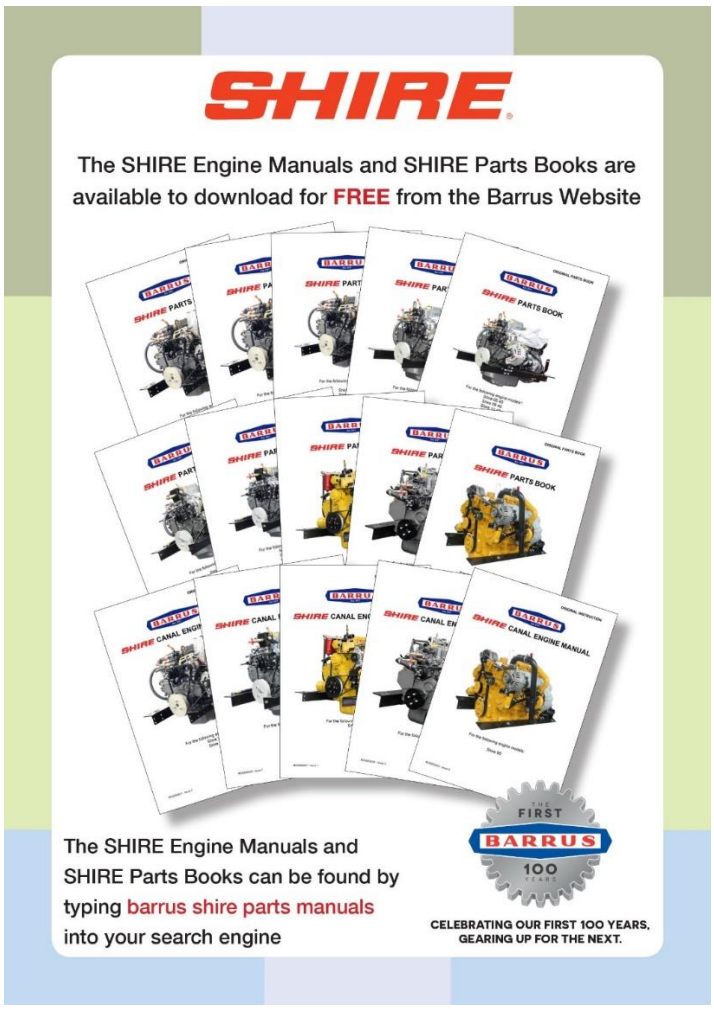

To access the Shire Engine Manuals and Shire Parts Books on the internet type the following short links into your search engine:

https://www.barrus.co.uk/shire-manuals/
https://www.barrus.co.uk/shire-parts/

Operators Manual

NOTICE:

THIS MANUAL FORMS AN INTEGRAL PART OF THE ENGINE IT ACCOMPANIES, IF A TRANSFER OF TITLE OCCURS, IT MUST ALWAYS BE HANDED OVER TO THE NEW OWNER.

Thank you for purchasing this Shire Canal Boat Marine Engine from E.P.Barrus. This manual has been compiled to help you to operate your engine and its associated parts with safety and pleasure. Please read it carefully in conjunction with the John Deere and PRM Gearbox Manuals and familiarise yourself with the engine and its parts before operation. The PRM Gearbox Manual is available from the PRM website:

www.prm-newage.com

If the engine is fitted with an E-Kit and/or Hybrid options, please also read the supplied manuals for them carefully.

The information and recommendations given in this manual are based on the latest information available at the time of publication. E.P.Barrus reserve the right to change the specification of its products and manuals without prior notice.

Depending upon the equipment specification of the engine and accessories fitted, there may be discrepancies with the information presented in this handbook. No claims may be pursued in this respect.

WARRANTY

This UK Limited Warranty provides coverage for five (5) years (or 2000 hours whichever occurs first) for recreational users and three (3) years (or 2000 hours whichever occurs first) for commercial users from the date of warranty registration. The warranty is for non-serviceable items. The repair or replacement of parts, or the performance of service under this warranty, does not extend the life of this warranty beyond its original expiry date.

To ensure that you have been registered for your warranty, please ask your Boat Builder or Engine Supplier to provide your portion of the registration form.

The Warranty will only apply if the following have been carried out:

1) The Installation Check List in the Installation Section has been fully completed.
2) The boat builder or engine installer has completed the Boat Builder Section on the Service Record Card (located at the back of this manual) regarding hand over and commissioning of boat.

E.P Barrus staff or their representatives can only carry out warranty repairs if there is suitable access and room around the engine to work safely.

Failure to complete and return the registration form to E.P Barrus will result in the warranty period starting from the date of engine manufacture <u>NOT</u> from the date of purchase.

PRM Gearboxes are covered by a three (3) year warranty for recreation users and two (2) years for commercial users.

Engine alternator, starter motor and electrical components are only covered by a one (1) year warranty.

CONDITIONS THAT MUST BE MET IN ORDER TO OBTAIN WARRANTY COVERAGE

Warranty coverage is only available from an authorised dealer in the country in which the sale occurred. Routine maintenance outlined in the Owner's Manual must be performed using genuine parts in order to maintain warranty coverage. If the customer performs maintenance,

Barrus reserves the right to make future warranty coverage possible only with proof of proper maintenance.

WARRANTY CLAIMS

Warranty claims shall be made by an authorised dealer or boat builder.

The dealer or boat builder will then arrange for the inspection and any necessary repairs. If the repairs carried out are not covered by the warranty, the purchaser shall pay for all related labour and material, and any other expenses associated with that service.

WHAT IS NOT COVERED

This limited warranty does not cover routine maintenance items, adjustments, normal wear and tear, damage caused by abnormal use, operation of the product in a manner inconsistent with the recommended operation/duty cycle section of the Owner's Manual, accident, submersion, improper installation (proper installation specification and techniques are set forth in the Operations and First time running sections in this manual), use of an accessory or part not manufactured or sold by us, or alteration or removal of parts. Expenses related to crane-out, launch, towing, storage, telephone, rental, inconvenience, slip fees, insurance coverage, loan payments, loss of time, loss of income, or any other types of accidental or consequential damages are not covered by this warranty.

Failure to use John Deere approved oils and coolants will invalidate any warranty.

Engine electrical systems fitted with alternator boost charge systems or any other electrical management systems are not covered by warranty.

Engine and fuel equipment is not covered by warranty if bio-diesel is used in the fuel system. Also if no type of water trap is incorporated into the fuel system.

Index

Page

SECTION 1 – Safety Precautions 10

1. General 10
2. Lifting 10
3. Rotating Shafts and Belts 10
4. Exhaust System 11
5. Launching and Lifting Boats 11
6. Batteries 11

SECTION 2 – Engine Identification 13

SECTION 3 – Component Identification 14

1. Shire 90 14

SECTION 4 – Control Panel 15

1. Deluxe Control Panel 15
2. Control Panel Overview 15
3. Warning Light Procedure 15
4. Overall Dimensions of the Deluxe Control Panel 18

SECTION 5 – Installation 19

1. Ventilation 19
2. Engine Beds 19
3. Cooling System 19
4. Skin Tanks 19
5. Engine Cooling Water Inlet and Outlet Hose Connections 20
6. Pressurised Water Header Tank 21
7. Shaft Connection and Propeller Selection 21
8. Engine Anti-Vibration Mounts 22
9. Engine Alignment 25
10. Engine Inclination 25
11. Electrics 26
12. Electrical Options 26

13. Engine Oil 27
14. Fuel 27
15. Coolant 28
16. Calorifier 28
17. Control Cables 29
18. Domestic Battery Bank 29
19. Control Panel 30
20. Exhaust System 31
21. Hydraulic Drive Transmissions 32
22. PRM 280DP Gearbox with Power Take Off (Option – RDG914A198) 33
23. Installation Check List 34
SECTION 6 – Operation 35
1. Starting the engine for the first time 35
2. Starting Procedure 35
3. Stopping Procedure 36
4. Full Load Running 36
5. Refuelling 36
6. Diesel Fuel Additive 37
7. Exhaust Back Pressure 37
8. Hybrid System (For engine with Hybrid System fitted) 37
9. Single Shift Control Lever Side Mount Operation - Optional (RDG9210055) 37
SECTION 7 – Service Procedure 38
1. Engine Oil and Filter Change 38
2. Air Filter Check and Change 39
3. Gearbox Oil Change 39
4. Disposal of Oil and Related Items 40
5. Primary Fuel Filter Drain (RDG9188346) 41
6. Primary Fuel Filter Change 42
7. Secondary Fuel Filter Change 42
8. Fuel System Bleeding 43

9. Cooling System 43
10. Belt Adjustment 44
11. Belt Maintenance 44
12. Belt Replacement 45
13. Control Panel Maintenance 46
SECTION 8 – Service Schedule 47
1. Specifications and Capacities 47
2. Service Intervals 48
SECTION 9 – Wiring Diagrams 49
1. Engine Wiring Diagram Shire 90 49
2. Deluxe Control Panel Wiring Diagram 50
3. 8kW Travel Power Wiring Diagram and Overall Dimensions 51
4. 5kW Travel Power System 52
5. Prestolite 24 Volt 120 Amp Alternator Wiring Diagram 53
SECTION 10 – Technical Data 55
1. Engine Data 55
2. Return Diesel System 55
3. Dry Weight of Engine Data 55
SECTION 11 – Dealer List 56
SECTION 12 – Shire Parts 58
SECTION 13 – Declarations 60
1. Declaration of Conformity for Recreational Craft Propulsion Engine with the requirements of Directive 2013/53/EU. 60
2. Declaration of Incorporation of Partly Completed Machinery 61
3. EU Declaration of Conformity with the Exhaust Emissions Requirements of Directive 2013/53/EU 65
SECTION 14 – Lubricant Safety Data Sheets 66
1. Torq-Gard Supreme 15W40 66
2. Cool Gard 74
SECTION 15 – Shire Service Record Card 81

SECTION 1 – Safety Precautions

1. General

NOTICE:

NEVER PERMIT ANYONE TO OPERATE THE ENGINE WITHOUT PROPER TRAINING.

It is the responsibility of the installer/operator to ensure that the finished installation complies with CE Marking, the relevant Health & Safety requirements and the recreational craft directive before commissioning.

Ensure that the engine battery isolator switch is in the off position and the key removed from the control panel before carrying out any maintenance or repairs.

2. Lifting

DANGER:

CRUSH HAZARD! NEVER STAND UNDER A HOISTED ENGINE. IF THE HOIST MECHANISM FAILS, THE ENGINE WILL FALL ON YOU, CAUSING SERIOUS INJURY OR DEATH.

The Lifting points supplied with the engine are for lifting the engine/gearbox only. A suitable spreader bar must be employed to prevent over-stressing either bracket during any lift.

3. Rotating Shafts and Belts

WARNING:

SEVERE HAZARD! KEEP HANDS AND OTHER BODY PARTS AWAY FROM MOVING/ROTATING PARTS. WEAR TIGHT FITTING CLOTHING AND KEEP YOUR HAIR SHORT OR TIE BACK. REMOVE ALL JEWELLERY BEFORE COMMENCING WORK. CHECK BEFORE STARTING THE ENGINE THAT ANY TOOLS OR RAGS USED DURING MAINTENANCE HAVE BEEN REMOVED FROM THE AREA.

The engine and its accessories are not intended to be put into operation until they are integrated into the boat as a whole. No person should be in the engine compartment and the engine cover or deck hatches should be closed whilst the engine is running.

4. Exhaust System

WARNING:

EXHAUST HAZARD! NEVER OPERATE ENGINE IN A BOATS ENGINE BAY WITHOUT PROPER VENTILATION. NEVER BLOCK VENTS OR OTHER MEANS OF VENTILATION. ALL COMBUSTION ENGINES CREATE CARBON MONOXIDE GAS DURING OPERATION. ACCUMULATION OF THIS GAS COULD CAUSE ILLNESS OR EVEN DEATH.

WARNING:

BURN HAZARD! WAIT UNTIL THE EXHAUST COOLS BEFORE YOU TOUCH IT.

Exhaust gases may have temperatures as high as 650°C and contain elements which are harmful if ingested.
It is therefore essential that exhaust systems are gas tight and lagged to prevent accidental burning and inhalation of exhaust gases when inside the boat cabin.

5. Launching and Lifting Boats

Care must be taken when launching or craning new boats into or out of the waterway, so that water does not enter the engine via the exhaust system or air vents. It is recommended that these are blocked temporarily whilst undertaking this procedure.

6. Batteries

DANGER:

EXPLOSION HAZARD! NEVER SHORT OUT THE BATTERY TERMINALS, INCLUDING WHEN CHECKING THE REMAINING BATTERY CHARGE THIS WILL RESULT IN A SPARK AND MAY CAUSE AN EXPLOSION OR FIRE.

WARNING:

BURN HAZARD! BATTERIES CONTAIN SULPHURIC ACID. NEVER ALLOW BATTERY FLUID TO COME IN CONTACT WITH SKIN, EYES OR CLOTHING. SEVERE BURNS COULD RESULT. MAKE SURE THE CORRECT PERSONAL PROTECTION EQUIPMENT IS WORN.

- Batteries can produce explosive gases; keep sparks and flames away from the battery.

NO SMOKING

- Batteries contain sulphuric acid; if splashed on skin or eyes, flush well with water and seek medical advice.
- Keep battery tops and battery compartment ventilated at all times
- If disconnecting the battery; remove the earth lead **FIRST**; and re-connect it last.
- If charging the battery; ensure that the charger is switched off before connecting and disconnecting.
- Do not tip the battery on its side.
- Please see label on battery or manufacturer's instructions for specific information.

SECTION 2 – Engine Identification

The engine serial number can be found engraved into the brass plate on the top of the engine rocker cover and stamped to the crankcase next to the starter motor. The Canal Boat Engines (CB) do not have identification initials on the engraved plate.

An example of the engine identification plate is shown below (**Figure 1**):

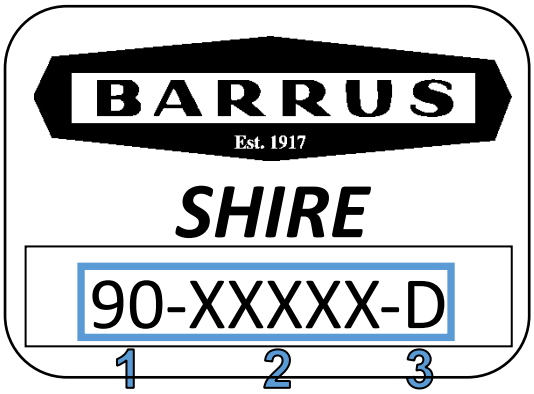

	Description
1	Engine Model
2	Serial Number
3	Indicates Model Type or Optional Extras: WB = Work Boat D = Deluxe Panel 3 = 3:1 Ratio Gearbox E = 3.5kW Travel Power Kit EE = 8kW Travel Power Kit

Figure 1: Engine Identification Badge

Description of Models:

Abbreviation	Type of Engine	Description*
CB	Canal Boat	Keel cooled dry exhaust manifold
WB	Work Boat	Seawater/Heat Exchanger cooled, dry exhaust manifold with either a dry exhaust system (same as a Canal Boat) or water injected exhaust system. Can also be used for sea going applications

***Note**: There are a number of optional extras that may be fitted to an engine that are not listed here.

A list of common item service part numbers can be found in **Section 12**, Shire Parts.

SECTION 3 – Component Identification

1. Shire 90

Figure 2: Shire 90 Left Side (Viewed from front)

	Description*
1	120 Amp 12 Volt Alternator
2	150 Amp 12 Volt Alternator

Figure 3: Shire 90 Right Side (Viewed from rear)

	Description*
3	Gearbox
4	Primary Fuel Filter
5	Gearbox Drain Pump
6	Oil Cooler
7	Secondary Fuel Filter
8	Engine Sump Pump

***Note**: There are a number of optional extras that may be fitted to an engine that are not shown here.

SECTION 4 – Control Panel

1. Deluxe Control Panel

Figure 4: Deluxe Control Panel

	Description
1	Tachometer Gauge
2	Hour Meter
3	Water Temperature Warning Light
4	Oil Pressure Warning Light
5	150A Alternator Charge Warning Light
6	120 Alternator Charge Warning Light
7	Glow Plug Light
8	Key Flap and Ignition Switch
9	120A Alternator Output Gauge
10	Oil Pressure Gauge
11	Water Temperature Gauge

2. Control Panel Overview

- All Shire engines are supplied with a control panel.
- Depending on the model of Shire engine, the control panel will either be a standard control panel or a deluxe control panel. The following table shows which panel comes with each type of engine as standard. Please note that on certain Shire engines a different type of control panel can be ordered as an option.

Engine	Control Panel Supplied*
Shire 90	Deluxe Control Panel

* Panel supplied as standard. On certain engines a different control panel may be supplied as an option

3. Warning Light Procedure

- When the ignition is first turned on, the control panel warning lights will come on as a bulb check. When the engine is started the warning lights will go out. Please note that the water temperature warning light and glow plug light operate slightly differently.

- The water temperature warning light will only come on for a brief period of time when the ignition is first turned on as a bulb check. It will then only illuminate in the case of the engine coolant temperature exceeding the maximum safety level.

- The glow plug light will come on when the ignition is first turned on for 5 – 8 seconds to indicate the heating system is operational. When the light goes out the engine can be started.

- Whilst the control panel is in operation all the gauges are backlit. This does not indicate a fault and is a normal function for the control panel.

- If any of the warning lights on the control panel come on **whilst** the engine is running, please follow the correct procedure as shown in the following table.

In the event of a fault, only trained and qualified personnel should undertake repairs on the engine

	Description	Procedure for Warning Light
1	Tachometer Gauge	-
2	Hour Meter	-
3	Water Temperature Warning Light	Reduce the engine revs and stop the engine within one or two minutes. Check the coolant level (refer to **8. Cooling System of SECTION 7 - SERVICE PROCEDURE**). If the coolant level is incorrect, fill it to the correct level (refer to **8. Cooling System of SECTION 7 - SERVICE PROCEDURE**) and restart the engine. If the coolant level is correct and the fault is still present please, or there is a coolant leak, please contact your local dealer.
4	Oil Pressure Warning Light	Stop the engine immediately. Contact your local dealer. Failure to stop the engine may result in permanent engine damage.
5	150A Alternator Charge Warning Light	This indicates that the alternator has stopped charging. The engine can still be operated for a short period of time. Contact your local dealer.
6	120 Alternator Charge Warning Light*	This indicates that the alternator has stopped charging. The engine can still be operated for a short period of time. Contact your local dealer.
7	Glow Plug Light	This indicates that the cold start system is operating. If the light fails to illuminate during the starting procedure contact your local dealer.
8	Key Flap and Ignition Switch	-
9	120A Alternator Output Gauge	-
10	Oil Pressure Gauge	-
11	Water Temperature Gauge	-

*Only applicable if fitted to the engine

4. Overall Dimensions of the Deluxe Control Panel

(All Dimensions are in mm)

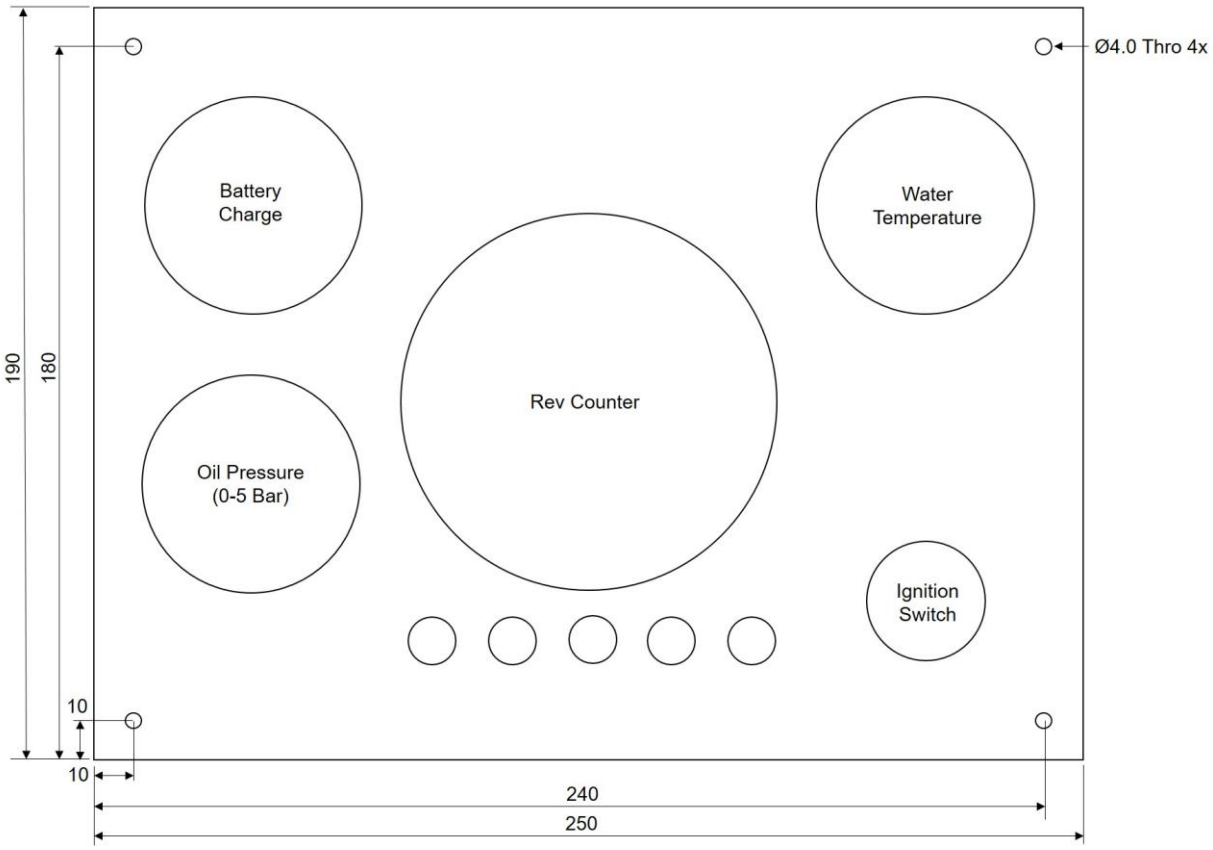

Figure 5: Deluxe Control Panel Dimensions

SECTION 5 – Installation

NOTICE:

REFER TO THE SHIRE AND JOHN DEERE MANUALS PRIOR TO INSTALLING THE ENGINE.

1. **Ventilation**

- All internal combustion engines radiate heat and require cool, clean air to aid complete combustion.
- Please Ensure that adequate engine room ventilation is provided, by fitting at least two vents of an aperture of not less than 15,000mm^2 each (24in^2).

An allowance must be made for any grills, louvres or bends placed in the airflows and generally an increase of 25% in area is sufficient to overcome any restriction problems.

2. **Engine Beds**

- These should be a minimum of 10mm thick, extended rearward and be welded to the hull and forward to the bulkhead. Webs or gussets must be welded in place midway to prevent flexing.

3. **Cooling System**

- Ensure pipe work to and from the skin tanks is of sufficient bore. Ensure tight bends and elbows are avoided or kept to a minimum (sizes are listed overleaf).
- For a Shire 90, 45mm (1 ¾”) is the minimum hose diameter.

If twin skin cooling tanks or additional floor tanks are used on a Shire 90 the flow will be greatly restricted. The water pump drive pulley can be changed for a smaller diameter one to increase the pump speed and flow rate. The John Deere part number is R115250.

4. **Skin Tanks**

The ideal skin tank internal thickness is between 50 and 75mm, the table below will indicate a suitable tank size. However, volume will not compensate for lack of surface area. It should be recognised that fitting a large calorifier will increase the theoretical cooling capacity only until it is up to temperature. It is unlikely that a boat on the inland waterways will operate at full power for long periods of time. The outside of the skin tank must be completely below the

waterline all of the time for effective cooling.

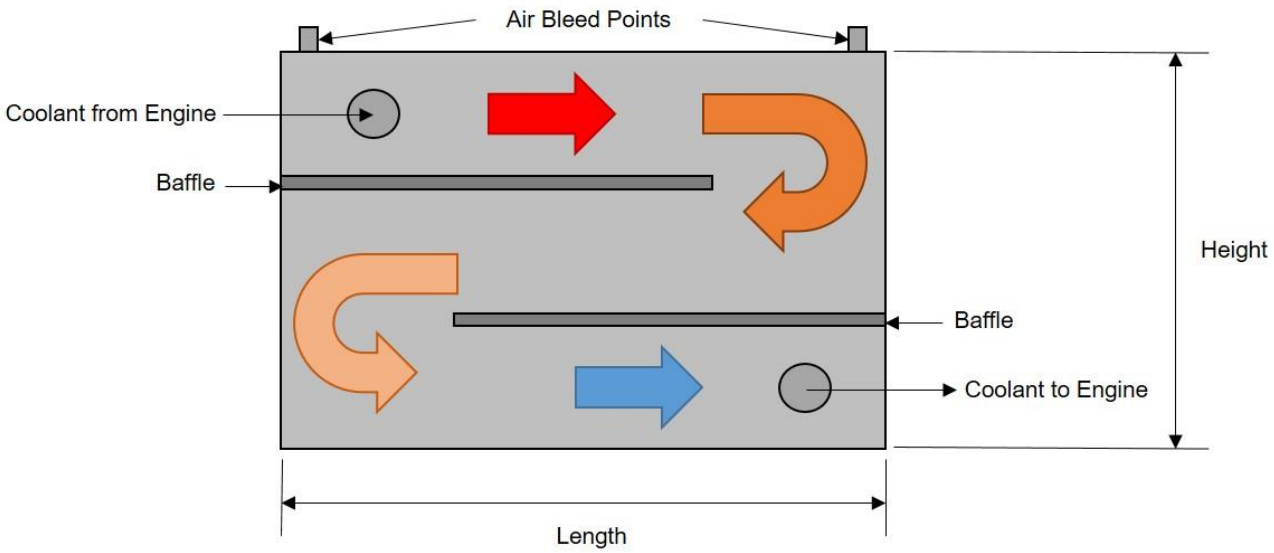

Figure 6: Skin Tank Flow Diagram

Recommended Skin Tank Size					
Engine	**HP**	**KW**	**Skin tank surface area m²**	**Suggested Height mm**	**Suggested Length mm**
90	90	67	2.15	952	2258

The skin tank size must be increased by up to approx 10% or a separate skin tank installed to cool the hydraulic oil, if a hydraulic bow thruster is used. Please refer to Section 5 - Installation, 21. Hydraulic Drive Transmission for further information

5. Engine Cooling Water Inlet and Outlet Hose Connections

The inlet is on the right hand (starboard) and the outlet is on the left hand (port) side of the engine:

Engine	Size (mm)
Shire 90	45mm OD, inlet and Outlet

Use a good quality hose that cannot collapse or kink and is capable of working at temperature in excess of 100°c.

6. Pressurised Water Header Tank

WARNING:

SCALD HAZARD! NEVER REMOVE THE HEADER TANK CAP IF THE ENGINE IS HOT. STEAM AND HOT COOLANT MAY SPURT OUT AND CAUSE INJURY. TIGHTEN THE HEADER TANK CAP SECURELY AFTER BEING REMOVED. STEAM CAN SPURT OUT DURING ENGINE OPERATION IF THE CAP IS LOOSE.

- The pressurised header tank should be mounted higher than the level of the engine, no less than 300mm, and no more than 1m from the engine, to prevent cooling system air locks.
- The header tank has two hose connections of different internal diameter's. The smaller internal diameter hosetail (left side of tank) should be connected to the top of the engine. This is the air-bleed. The larger internal diameter hose-tail (right side of the tank) should be connected to the lower pipe on the engine. This is the water-fill. The hoses **MUST** be connected correctly.

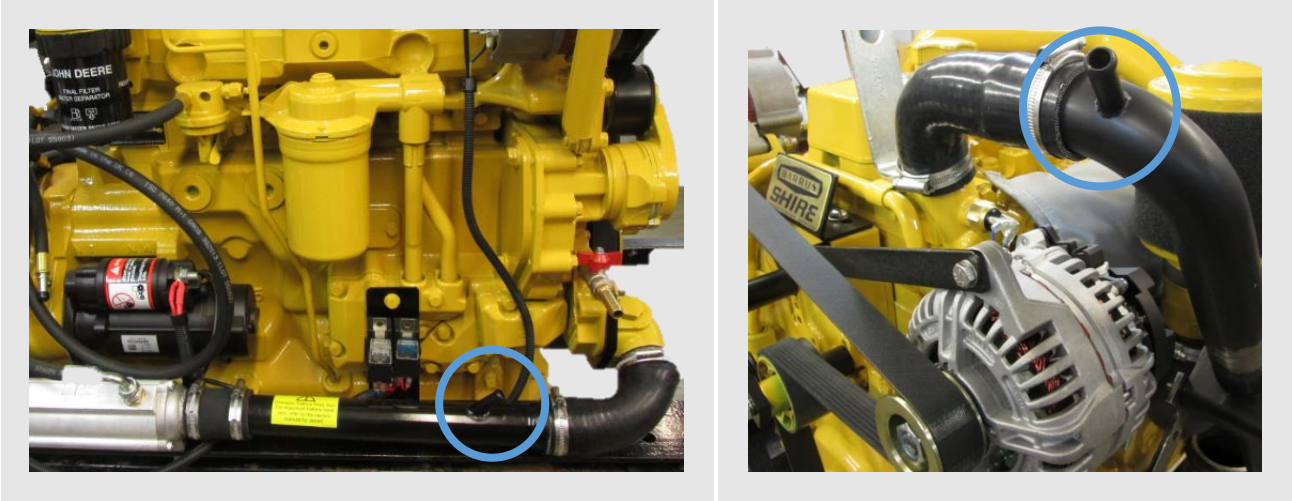

Figure 7: Shire 90 Header Tank Connections

- A constant rise on pipework is required to prevent air locks

7. Shaft Connection and Propeller Selection

- Some type of flexible coupling must be used to connect the gearbox output flange to the propeller shaft flange.
- Please note, underperforming engines will not be covered under warranty if the cause of the poor performance is found to be the use of an inappropriate propeller.

8. Engine Anti-Vibration Mounts

- Ensure that the engine feet do not end up at the top of the thread on the engine mounts, this puts undue pressure on them and can result in excessive engine movement and premature mount failure. If this is a problem put the steel packing plates which are supplied with the engine under the mounts. The packing plates are 25mm thick. If additional packing plates are required order: Order RDG3906 Engine mount spacer. Alternatively they can be manufactured locally.
- Ensure that the engine has been installed for at least 24 hours before shaft alignment is checked, to allow the mounts time to settle under the engine weight.
- Ensure that the anti-vibration mount centre screw is sufficiently raised so as not to touch the engine bed. If this occurs, excessive engine vibration will be experienced through the hull.
- For best results, fit the front AV mounts into the front holes in the engine rails. If the engine room space is a problem the mounts can be fitted slightly further back in the alternative holes and the front of the rail cut off – leaving 50mm of material to retain strength (measuring from the centre of the mount hole to the front end of the rail). Note: This procedure is only possible on non Travel Power engines, and may result in a very slight increase in vibration. AV mount installation points are shown on (**Figure *10***)

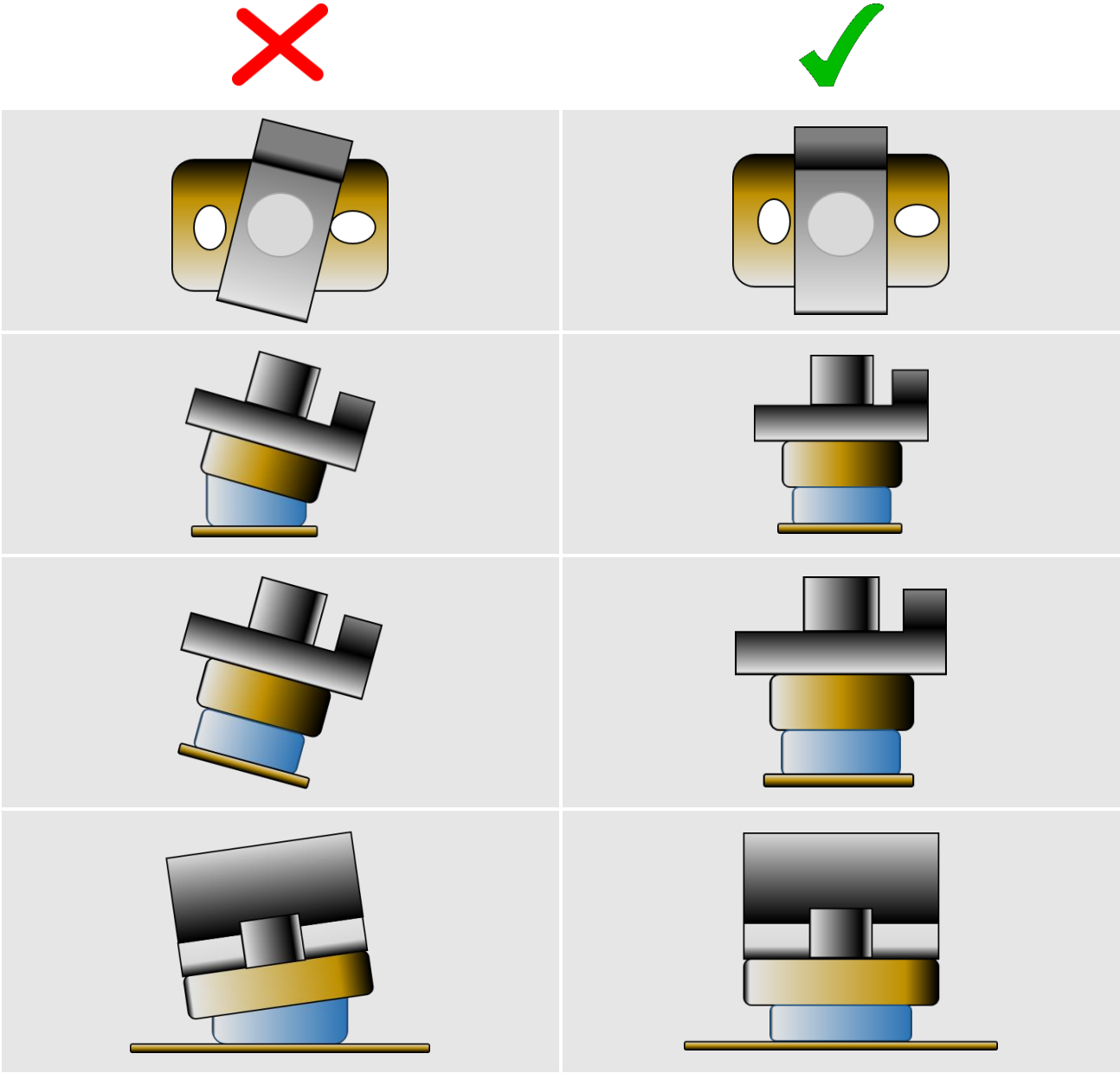

Figure 8: Correct Anti-Vibration Mount Installation

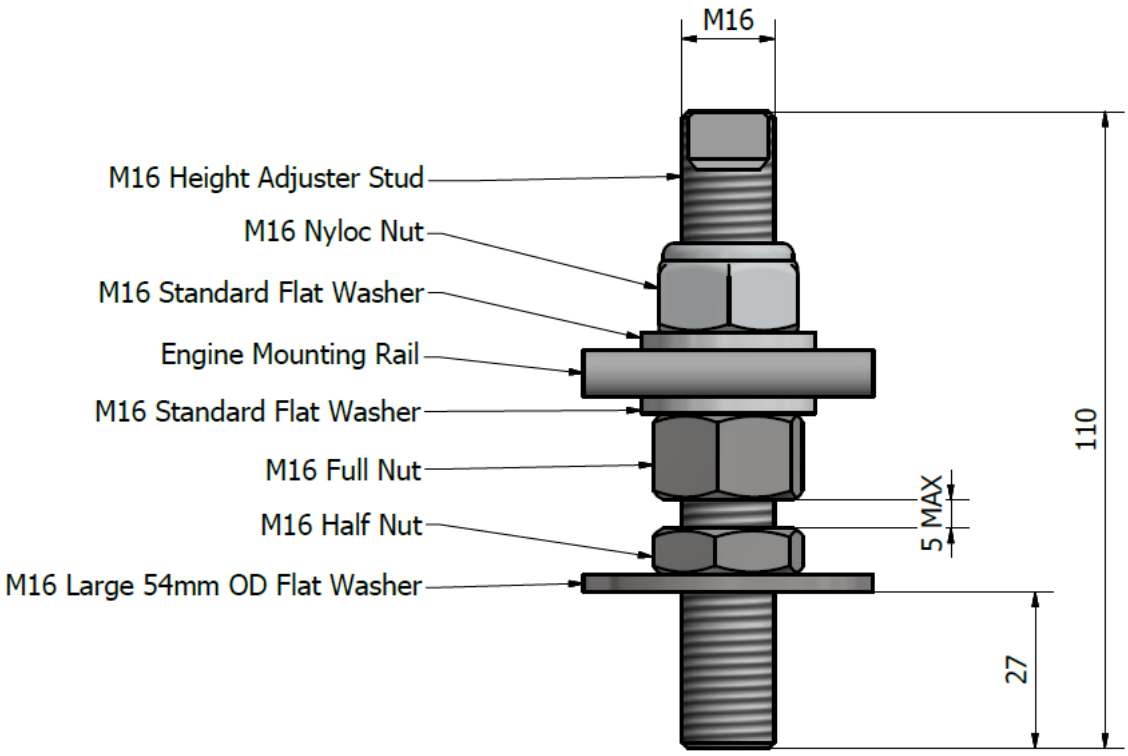

Figure 9: Correct Anti-Vibration Mount Installation

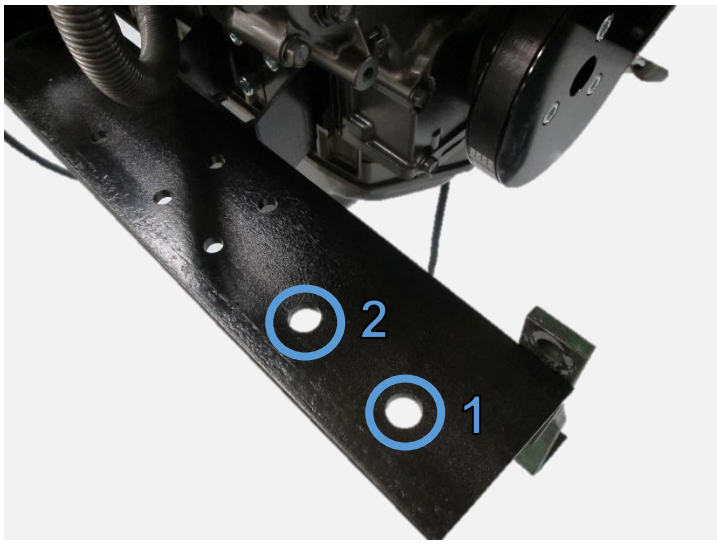

	Description
1	Normal mounting position
2	Alternative mounting position if engine compartment space is restricted

Figure 10: Anti-Vibration Mount Installation Points

9. Engine Alignment

- The gearbox output shaft flange and propeller shaft input flange must be almost perfectly aligned. A maximum of 0.05mm (0.002”) misalignment in any plane is acceptable. Ensure alignment is recheck after the first 4 hours of running, after the first month and thereafter annually.
- If the engine is out of alignment it will result in excessive vibration and possible damage to the stern tube and propeller shaft.
  Boats that are fitted with fully flexible drive couplings should still have the engine and shaft alignment as close as possible. A dummy shaft may be required for this purpose.

Some types of flexible shaft couplings require the input and output to be misaligned, check with the coupling manufacturer’s installation instructions.

- Minimum clearance of 25mm between rails and engine beds.

10. Engine Inclination

- The engine installation angle is the angle of the crankshaft centre to the water line (***Figure* 11**).
- The propulsion efficiency decreases as the engine installation angle increases.
- The **maximum** engine installation angle is 15°

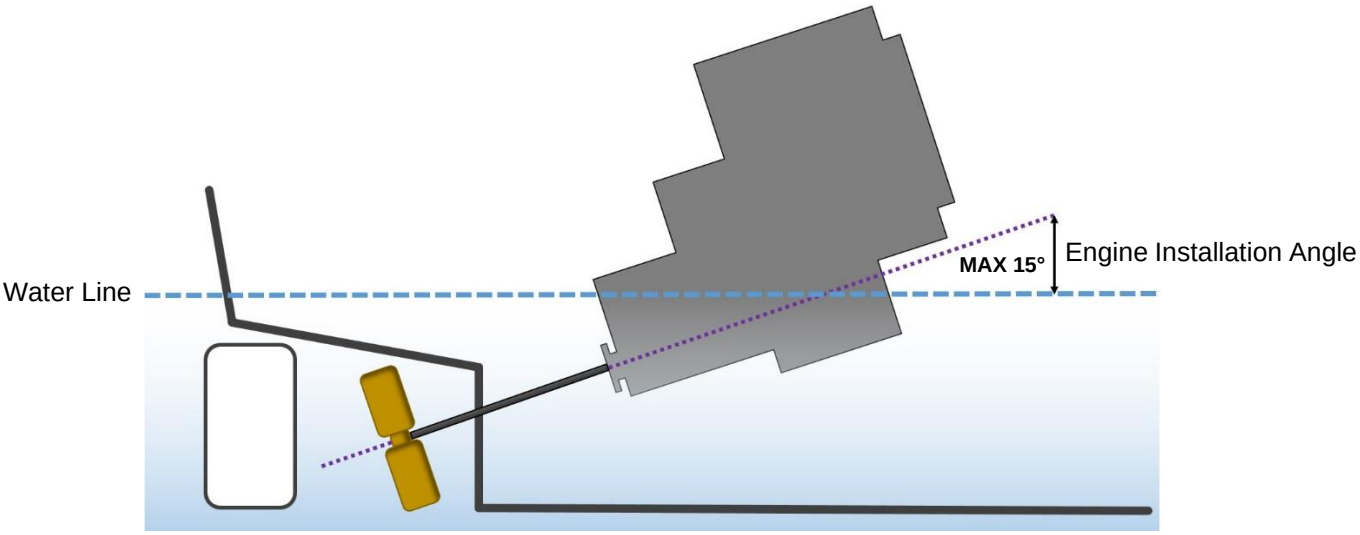

Figure 11: Maximum Engine Installation Angle

11. Electrics

CAUTION

- Do not attach any part, hose or cable to the engine wiring harness. There is a warning label attached to the harness to remind you of this.
- Connect the wiring extension harness multi plug to the panel plug and the other end to the engine.
- Connect the start battery positive cable to the engine starter motor solenoid terminal.
- The start motor battery cable must have a cross sectional area of at least 70mm^2.
- Connect the domestic battery positive cable to the 120A alternator B+ terminal. This ensures the 150A alternator charges the start battery. The blue link wire between the 120A Alternator B+ terminal or 150A “B+” terminal and the starter motor solenoid **MUST** be removed when the domestic battery is connected.
- Both the negative battery terminals can be connected to a common earth point.

Note: The 240A alternator is of the insulated earth design and requires a heavy duty earth cable installed at all times.

12. Electrical Options

DANGER:

ELECTRIC SHOCK RISK!

- If the engine is fitted with the optional 230V Travel Power System, refer to the manual supplied with it for correct wiring, control box installation and operation.
- The Shire range can be supplied with other optional additional 12V or 24V alternators. This will be supplied fitted but not wired. It is the responsibility of the boat builder to ensure that this is correctly wired to the boats electrical system.

13. Engine Oil

WARNING:

BURN HAZARD! WAIT UNTIL THE ENGINE COOLS BEFORE YOU DRAIN THE ENGINE OIL. HOT ENGINE OIL MAY SPLASH AND BURN YOU.

- All Shire engines are supplied fully run in.
- Check oil levels in engine and gearbox before starting
- The Shire 90 uses John Deere oil. See **Section 8 – Service Schedule** for the specification of the oil

14. Fuel

WARNING:

DIESEL FUEL IS FLAMMABLE AND EXPLOSIVE UNDER CERTAIN CONDITIONS.

WARNING:

DIESEL FUEL IS HARMFUL TO SKIN. MAKE SURE THE RELEVANT PERSONAL PROTECTION EQUIPMENT IS WORN.

- Ensure the main fuel tank is clear of dirt and water.
- A separate water trap must be fitted to all engine installations. The engines are supplied with an additional fuel pre-filter water trap as standard.
- Connect fuel feed return hoses from engine to main supply and return lines to main fuel tank, ensuring they are connected the correct way around.
- Connect the inlet to the primary fuel filter inlet hose.
- The engine hoses are supplied with 3/8” (10mm) OD metal hosetails and should be securely fitted to the main supply and return pipes with compression fittings.
- The engine hoses should have sufficient slack to absorb engine movement without placing strain on the hoses and be securely clipped to prevent accidental damage and chafing.
- Initially fill the fuel system by loosening the bleed screw on the top of the primary fuel

filter / water trap. Pump the primer on the primary filter. Close the bleed screw when fuel begins to flow clearly (no bubbles). The rest of the process is done automatically by the engine. It is rarely necessary to bleed the injection pump or injectors upon installation as the engine will already have fuel in it from the engine run in and test procedure.

15. Coolant

WARNING:

SCALD HAZARD! NEVER REMOVE THE COOLANT BOTTLE CAP IF THE ENGINE IS HOT. STEAM AND HOT COOLANT WILL SPURT OUT AND CAUSE INJURY. TIGHTEN THE CAP SECURELY AFTER BEING REMOVED. STEAM CAN SPURT OUT DURING ENGINE OPERATION IF THE CAP IS LOOSE.

WARNING:

BURN HAZARD! WAIT UNTIL THE ENGINE COOLS BEFORE YOU DRAIN THE ENGINE COOLANT. HOT ENGINE COOLANT MAY SPLASH AND BURN YOU.

- John Deere recommend that Cool Gard is used. Cool Gard is already mixed and must **NOT** have water added to it.
- Open the calorifier taps (if fitted) to fill the calorifier system and displace air.
- To fill the cooling system for the first time, fill the boat skin via the inlet hose connection or filler plug if fitted.
- Fill the engine through the white plastic expansion tank.
- Bleed skin tank.

After running the engine for the first time, stop the engine and monitor the water level frequently as trapped air bubbles may be expelled. Top up the system as necessary.

16. Calorifier

- The temperature of coolant flowing to the calorifier from the engine can be between 85 and 90°C. A blender valve must be incorporated in the calorifier / hot water system

outlet to lower the hot water temperature for domestic use.

Calorifier Inlet	Calorifier Outlet (located at rear of engine)
	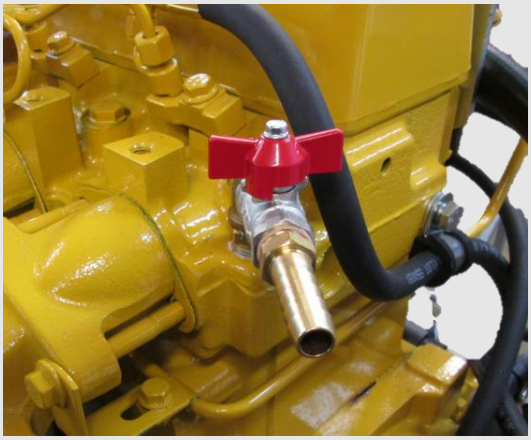

Figure 12: Shire 90 Calorifier Connections

17. Control Cables

- Connect engine speed control cable. With the engine off, ensure that the engine speed control lever achieves full travel from idle to full speed. Adjust if necessary.
- Check the gearbox shift lever selects positively and that the drive direction corresponds with the gearshift control lever. Ensure that the gearbox control lever and the gearshift lever are both in neutral before connection. Adjust if necessary.

18. Domestic Battery Bank

DANGER:

EXPLOSION HAZARD! NEVER SHORT OUT THE BATTERY TERMINALS, INCLUDING WHEN CHECKING THE REMAINING BATTERY CHARGE THIS WILL RESULT IN A SPARK AND MAY CAUSE AN EXPLOSION OR FIRE.

WARNING:

BURN HAZARD! BATTERIES CONTAIN SULPHURIC ACID. NEVER ALLOW BATTERY FLUID TO COME IN CONTACT WITH SKIN, EYES OR CLOTHING. SEVERE BURNS COULD RESULT. MAKE SURE THE CORRECT PERSONAL PROTECTION EQUIPMENT IS WORN.

Domestic battery banks that are too large create excessive loads on the domestic alternator. Alternators running at maximum output for prolonged periods of time will eventually fail prematurely; alternators that fail due to the battery bank being over the maximum recommended size will not be covered by warranty.
Higher output additional alternators, or travel power kits are available: if larger battery banks are required discuss your individual power requirements with the boat builder or engine supplier.

- The maximum domestic battery bank is calculated using the following:
  - Live aboard, three times domestic alternator, maximum output current.
  - Weekend cruising or hire fleet use, three and a half times domestic alternator, maximum output current.

Example 1:
Live aboard application fitted with a 150amp domestic alternator
3 x 150 = 450 ampere/hour maximum battery bank size

Example 2:
Weekend cruising or hire fleet application fitted with a 240amp domestic alternator
3.5 x 240 = 840 ampere/hour maximum battery bank size.

19. Control Panel

CAUTION

All Shire engines are supplied with an engine control panel that shows RPM and hours run and include warning lights and a warning buzzer. The deluxe panels also have additional gauges for the water temp, oil pressure and battery charging. The panels are designed to be splash proof and are correctly installed with the gauges vertical. Do not install so that they remain out in the open, or cover up when not on use.
The control panel engine tachometer is supplied already calibrated to measure correct engine speed. If a new control panel, tachometer or alternative alternator is fitted, the tacho will require re-calibrating.

Control Panel Calibration Procedure:

- Connect control panel plug to engine wiring loom plug.

- Turn ignition on (do not start engine).
- Press and hold black button on rear of tacho until “H-“appears on the digital display at the bottom of the tacho (on the front).
- When pressing and holding the black button on rear of tacho, the value displayed will increase / decrease until the button is released. Then when pressing again it will increase / decrease in the other direction. Keep doing this until the digitally displayed value on the bottom of tacho reaches the correct value, according to the type of alternator (see below table). This must be set to the alternator with blue and black wire connected to it.
- Confirm settings to tacho meter reader.
- An optical tachometer is required to check the reading.

Barrus Alternator (Amps)	Barrus Tacho reading
150	19.50 – 20.00

Alternative or non-standard alternators will require calibrating and checking by trial and error, with a hand held tacho until the engine speed and indicated tachometer speed are the same.

- The Shire 90 has an energise to run system.

20. Exhaust System

WARNING:

EXHAUST HAZARD! NEVER OPERATE ENGINE WITHOUT PROPER VENTILATION. NEVER BLOCK VENTS OR OTHER MEANS OF VENTILATION. ALL COMBUSTION ENGINES CREATE CARBON MONOXIDE GAS DURING OPERATION. ACCUMULATION OF THIS GAS COULD CAUSE ILLNESS OR EVEN DEATH.

The exhaust outlet size on the engine is 2½” BSP female. There must be a flexible exhaust hose of suitable exhaust grade between the engine and the silencer or hull outlet. The outlet must be above the waterline at all times.

- Make sure the exhaust increases then decreases in height as shown in (***Figure 13***).

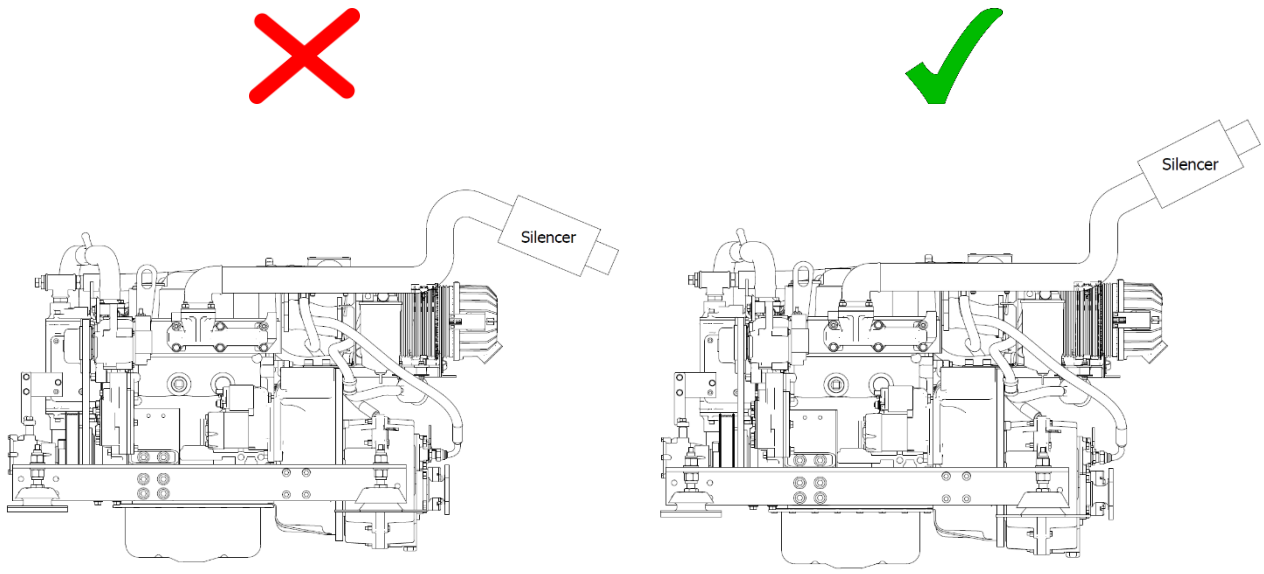

Figure 13: Correct Exhaust Installation

21. Hydraulic Drive Transmissions

If an engine is to have a hydraulic drive transmission attached to it instead of a conventional marine gearbox, a number of points must be observed.

- Bobtail engines (i.e. Engines supplied without a marine gearbox), normally do not have a gearbox oil cooler fitted. However if a cooler is supplied, this will only be suitable to cool a conventional marine gearbox.
- Hydraulic drive transmissions generate far more heat than a conventional marine gearbox. Therefore the size of the oil cooler installed must be calculated by the hydraulic drive transmission supplier. This is to ensure it has sufficient cooling capacity and is sized appropriately taking into account:

- Maximum engine power.
- High ambient summer air temperature.
- Summer River/Canal/Sea temperature.
- No additional restriction to engine coolant flow is present.

Skin tanks will also need to be increased by up to approx. 10% to dissipate the additional heat generated, when a hydraulic bow thruster is used.

An additional separate skin tank of suitable capacity with separate water circulating pump will need to be fitted for a hydraulic drive system or hydraulic bow thruster.

Hydraulic oil coolers should be installed after the engine, not before. Coolers that are installed before the engine will invalidate the engine warranty.

22. PRM 280DP Gearbox with Power Take Off (Option – RDG914A198)

The PRM 280 with power take off is designed for driving hydraulic pumps made to SAEJ77 Series B specification. The maximum power which can be transmitted is 22kW (29.5hp) per 1000rpm.

The power take off operates in the opposite direction to the gearbox input shaft. The output of the live power take off is the same speed as the engine.

23. Installation Check List

	Please tick box ✔
Engine alignment correct, clearance all round, check propeller turns by hand (Ensure ignition is off battery and battery master switch is off)	
Anti-Vibration mounts correct height, spacers if necessary. Make sure all nuts are tight	
Exhaust system as specified	
Battery leads are of correct size, tightened and start battery is charged	
Check tension of alternator belts, wiring connected and belt alignment checked if removed	
Check fuel system is connected correctly and primed	
Fuel line water trap installed and water drained off	
Check header tank and skin tank connections are correct way round, constant pipework rise to header tank	
Check level of coolant in header tank and correct ratio of antifreeze to water	
All air has been bled from skin tank, calorifier and pipework	
Engine and gearbox oil levels are as specified	
Throttle and gear cables correctly adjusted and operating smoothly	
All pipework and cabling supported and not chaffing, slack to allow movement of engine	
Engine control panel installed in a position where it is not out in the open	
Confirm engine control panel, gauges and warning lights are all operational	
Run the engine for 20 minutes with the boat tied up and in gear (at ½ speed). Check for leaks and that all systems operate correctly	
Check & Set the Engine Idle Speed to 850-875 rpm	
Check for leaks	
Explain/Demonstrate daily/weekly/periodic maintenance checks	
Explain/Demonstrate off season storage and maintenance	
Travel Power 230v AC systems installed by qualified electrician and to BMEA code of practice for Electrical and Electronic installation in Boats: BS EN ISO 13297 (ac)	
Installer's signature	
Installer name/company	

SECTION 6 – Operation

NOTICE:

REFER TO THE JOHN DEERE MANUAL PRIOR TO STARTING THE ENGINE.

1. Starting the engine for the first time

- Remove ignition key.
- Ensure all oil and coolant levels are checked.
- Ensure both the engine and domestic batteries are connected or the blue link wire is in place. Both battery master switches must be turned on. Failure to do so may damage the domestic alternator.

2. Starting Procedure

The Shire 90 does not have a cold start function as standard. This means the glow plug light will not illuminate.

- Ensure there is no one in the engine compartment.
- Ensure the engine compartment door is closed.
- Ensure the gearshift control level is set to neutral and that all persons are clear of any moving parts.
- Insert ignition key.
- Turn key to on position.
- Observe warning lights (and gauges on deluxe panel). Note: The engine water temperature overheat warning light will only come on for a brief period of time when the ignition is first turned on as a bulb check. It will then only illuminate in the case of the engine coolant temperature exceeding the maximum safety level.
- Turn key to start and hold to crank.
- Crank the engine for no more than 15 seconds.
- Upon engine start, immediately release the key.
- Key will return to on position.
- The warning buzzer will stop and on the deluxe panel, the oil pressure gauge will show an oil pressure of 3.5 - 4.5 bar (51 – 61 psi).
- Should any warning light not go out, or if there is no reading on the oil pressure gauge,

the buzzer will continue sounding. In this case, stop the engine immediately and check the relevant system (Note: If the charge light does not go out, briefly increase the engine speed).

- Stop engine if any abnormal noises are detected.
- Visually check the engine for oil, fuel and coolant leaks, after initial start-up and at regular intervals. Note: Engine must be stopped to carry out this check).

3. Stopping Procedure

- Move speed control lever to idle position.
- Turn key to the off position.

4. Full Load Running

- Running diesel engines near there rated output (maximum load) regularly will disperse accumulated carbon and condensation, enhancing engine life and reducing emissions.
- Running the engine at, or near maximum speed whilst in gear may not be possible on inland waterways with speed limits in place. This will have to be carried out whilst moored up. Ensure that the mooring ropes and posts are strong enough to allow this and that the water is deep enough not to damage the propeller. It is recommended that the engine is run at or near full load for 15 minutes (maximum revs, in gear) every 50 hours.

5. Refuelling

WARNING:

DIESEL FUEL IS FLAMMABLE AND EXPLOSIVE UNDER CERTAIN CONDITIONS.

WARNING:

DIESEL FUEL IS HARMFUL TO SKIN. MAKE SURE THE RELEVANT PERSONAL PROTECTION EQUIPMENT IS WORN.

- All Shire canal boat engines run on diesel fuel.
- Please note that when the vessel is to be left for any period of time, the fuel tank should be left full to eliminate the build-up of condensation and formation of water in the fuel tank.

- Engine to be turned off while refuelling.
- The fuel type for all Shire canal boat engines is diesel. **DO NOT USE BIODIESEL.**

6. Diesel Fuel Additive

The use of diesel fuel additive is strongly recommended on Shire engines. The quality of the fuel available when cruising is often unknown. Also the fuel may have been in storage for long periods of time. The use of additives will ensure that your engine fuel injection system is in top condition which should result in many years of smooth reliable operation, without the cost and inconvenience of expensive breakdowns due to poor quality fuel. It has also been found that improvements in fuel consumption and start ability are an added benefit of using this product. Diesel fuel additive is available from your Shire dealer in a handy 500ml container, Part Number RDG80210219.

7. Exhaust Back Pressure

The back pressure falls within the manufacturers recommended range when using the optional exhaust system with the engine. Exhaust silencers, flexible exhaust hose connections and lagging blanket are all available as optional extras:

Part Description	Part Number
24” Flexible Exhaust Hose 2½ “ BSPT	RDG3017410
Shire 90 Hospital Silencer	RDG9047445
2½” BSP Galv Fem Equal Union Tpr St	RDG9047504
Flexible Exhaust Blanket	RDG9047331

8. Hybrid System (For engine with Hybrid System fitted)

Refer to the separate Hybrid Operation Manual for more details on the system.

9. Single Shift Control Lever Side Mount Operation - Optional (RDG9210055)

To engage forward or reverse gear:

- Lift the safety latch under the handle before shifting.

To rev the engine in neutral:

- Pull the lever out sideways from the main body.
- Lift the safety latch under the handle then shift.

SECTION 7 – Service Procedure

NOTICE:

REFER TO THE JOHN DEERE MANUAL PRIOR TO CARRYING OUT ANY SERVICE OR MAINTENANCE WORK.

WARNING:

PRIOR TO CARRYING OUT ANY SERVICE OR MAINTENANCE WORK MAKE SURE THE RELEVANT PERSONAL PROTECTION EQUIPMENT IS WORN.

1. Engine Oil and Filter Change

WARNING:

BURN HAZARD! WAIT UNTIL THE ENGINE COOLS SLIGHTLY BEFORE YOU DRAIN THE ENGINE OIL. HOT ENGINE OIL MAY SPLASH AND BURN YOU.

- Change the engine oil while the engine is still warm.
- Remove the blanking plug in the sump pump spout (8mm Allen key). The larger of the two oil extraction pumps is for draining engine oil.
- Place a plastic tube over the spout and into a container. Operate the pump handle to empty the sump. Note: Remember to refit the blanking plug afterwards.
- Place a drip tray under the engine to catch the small amount of oil that will escape from the oil filter. Using an oil filter removal tool, slacken the filter from the engine block in an anti-clockwise direction. Remove the tool and spin off the filter.
- Lightly oil the new filter O ring seal and install the filter onto the engine. Spin it on in a clockwise direction and finally tighten by hand only as firmly as you can.
- Refill the sump using the yellow oil filler cap in the rocker cover on top of the engine.
- Oil level should be to the top mark on the dipstick.
- Run the engine for 5 minutes before checking the oil level with the dipstick and top up if required.
- Do not exceed the maximum oil level marker as this may cause damage to the internal components of the engine.

2. Air Filter Check and Change

- Release the two spring clips. Pull off the end cover to reveal the filter element. The element simply pulls out. Note: The Shire 90 has an inner safety element fitted.
- To fit the new element, slide the open end of the filter element into the main body. Gently push the element until fully seated. Refit the end cover.
- The air filter is constructed from pleated paper. Inspect it closely for dust or dirt. The air filter cannot be cleaned and must be replaced when dirty. The engine requires clean unrestricted air to run efficiently. Failure to maintain the air filter could result in smoke, increased fuel consumption and ultimately engine damage.

3. Gearbox Oil Change

WARNING:

BURN HAZARD! WAIT UNTIL THE GEARBOX COOLS SLIGHTLY YOU DRAIN THE GEARBOX OIL. HOT OIL MAY SPLASH AND BURN YOU.

Some engines will have a gearbox sump pump fitted. To change the oil in this circumstance, follow the same procedures as were outlined for changing the engine oil. For engines without a gearbox sump pump follow the procedure below.

- Change the gearbox oil while it is still warm (Please refer to the gearbox manual for more information).
- Place a tray beneath the gearbox that will hold at least 2 litres.
- Remove the drain plug and allow 5 minutes for the oil to drain thoroughly.
- Replace the drain plug. Ensure that the sealing washer (if used) is still in place and in good condition before tightening. Fit a new washer if required.
- Refill the gearbox with oil to the upper mark on the dipstick. Screw the dipstick in fully, to establish level. Refer to the PRM owner manual for more details. **Section 6** in this manual contains details of oil specifications.
- Do not overfill the gearbox as this can damage the internal components.

Gearbox Model	Location of Dipstick / Filler Plug / Drain Plug
PRM 280	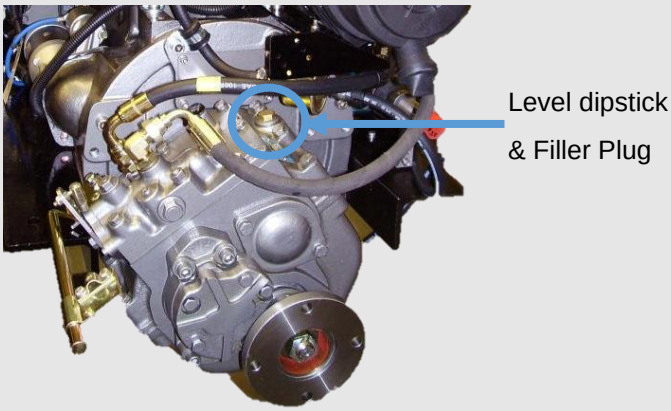
PRM 500	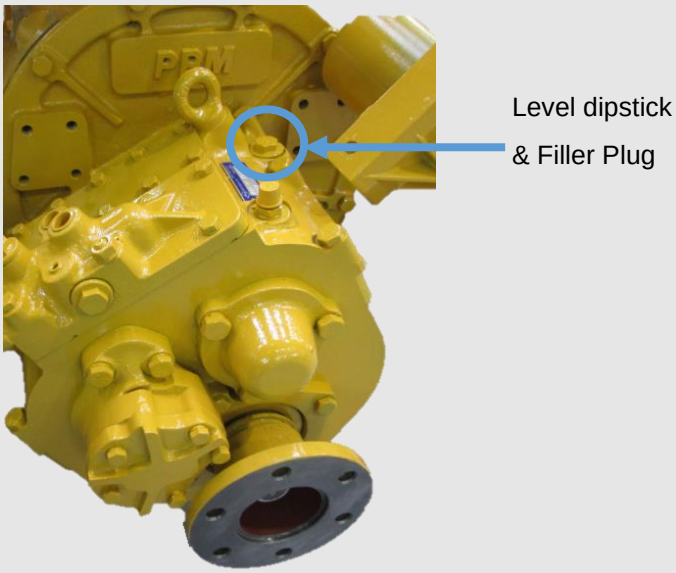

Figure 14: Location of Dipstick / Filler Plug on Gearbox

4. Disposal of Oil and Related Items

NOTICE:

ALWAYS BE ENVIRONMENTALLY RESPONSIBLE.

- Please dispose of used oil and oil filters safely with due regard for the environment and take to your local waste oil disposal point.
- Do not allow oil or contaminated parts to enter the inland water way system.

5. Primary Fuel Filter Drain (RDG9188346)

WARNING:

DIESEL FUEL IS FLAMMABLE AND EXPLOSIVE UNDER CERTAIN CONDITIONS.

WARNING:

DIESEL FUEL IS HARMFUL TO SKIN. MAKE SURE THE RELEVANT PERSONAL PROTECTION EQUIPMENT IS WORN.

- Place a small drain bowl under the primary fuel filter / water trap.
- Loosen the drain screw located in the bottom of the fuel filter / water trap (**Figure 15**)
- Drain off any water.
- Once the water has been drained, retighten the drain screw.
- It is unlikely the complete fuel system will require bleeding.
- Run engine for 5 minutes.
- Check that the drain union is tight and that there are no leaks.
- Do not over tighten the drain screw.

The boat builder should have fitted an additional water trap in the fuel system. Ensure that this is drained regularly.

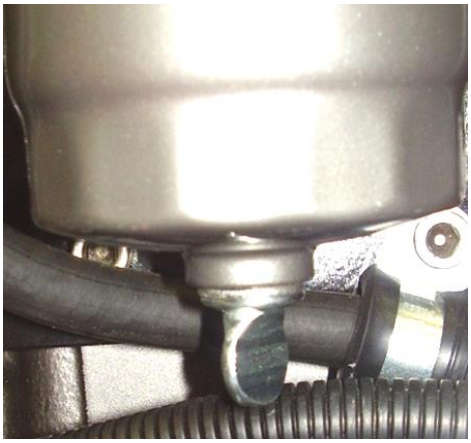

Figure 15: Primary Fuel Filter Drain Screw

6. Primary Fuel Filter Change

DANGER:

DIESEL FUEL IS FLAMMABLE AND EXPLOSIVE UNDER CERTAIN CONDITIONS.

WARNING:

DIESEL FUEL IS HARMFUL TO SKIN. MAKE SURE THE RELEVANT PERSONAL PROTECTION EQUIPMENT IS WORN.

- Ensure the fuel tank is at least ¾ full prior to undertaking this procedure.
- Turn off the main boat fuel supply tap. This is located on or near the fuel tank.
- Place a small drip tray under the filter body.
- Remove the fuel filter using a filter strap wrench. Unscrew the filter until loose then remove by hand.
- Retain the metal fuel filter drain screw from the old filter and reuse in the new filter. The part number for the drain screw is RDG9189022.
- Smear a small amount of clean fuel on all of the O ring seals that are supplied with the new filter element.
- Screw the new element back into the filter head. Tighten by hand only.
- Turn the main boat fuel supply tap back on.
- Ensure the system is correctly bled before attempting to start up.

7. Secondary Fuel Filter Change

DANGER:

DIESEL FUEL IS FLAMMABLE AND EXPLOSIVE UNDER CERTAIN CONDITIONS.

WARNING:

DIESEL FUEL IS HARMFUL TO SKIN. MAKE SURE THE RELEVANT PERSONAL PROTECTION EQUIPMENT IS WORN.

- Refer to the John Deere Operators Manual, *Lubrication and Maintenance.*

The metal fuel filter water drain screw must be retained and put into the new filter element.

8. **Fuel System Bleeding**

DANGER:

DIESEL FUEL IS FLAMMABLE AND EXPLOSIVE UNDER CERTAIN CONDITIONS.

WARNING:

DIESEL FUEL IS HARMFUL TO SKIN. MAKE SURE THE RELEVANT PERSONAL PROTECTION EQUIPMENT IS WORN.

- Ensure the fuel tank is at least ¾ full prior to undertaking this procedure.
- Refer to the John Deere Operators Manual, Lubrication and Maintenance.

9. **Cooling System**

DANGER:

SCALD HAZARD! NEVER REMOVE THE COOLANT PRESSURE CAP IF THE ENGINE IS HOT. STEAM AND HOT COOLANT WILL SPURT OUT AND SERIOUSLY BURN YOU. TIGHTEN THE CAP SECURELY AFTER BEING REMOVED. STEAM CAN SPURT OUT DURING ENGINE OPERATION IF THE CAP IS LOOSE.

WARNING:

BURN HAZARD! WAIT UNTIL THE ENGINE COOLS BEFORE YOU DRAIN THE ENGINE COOLANT. HOT ENGINE COOLANT MAY SPLASH AND BURN YOU.

- To check the coolant level, ensure that the engine has been shut down for at least half an hour.
- The coolant level can be checked visually and should be between the two level marks formed on the front of the white plastic expansion tank.
- If required, top up the level with Cool Gard (neat).
- Do not use water only to top up as this weakens the coolant mix, reducing the level of frost protection and anti-corrosion protection of the coolant.

10. Belt Adjustment

WARNING:

SEVERE HAZARD! KEEP HANDS AND OTHER BODY PARTS AWAY FROM MOVING/ROTATING PARTS. WEAR TIGHT FITTING CLOTHING AND KEEP YOUR HAIR SHORT OR TIE BACK. REMOVE ALL JEWELLERY BEFORE COMMENCING WORK. CHECK BEFORE STARTING THE ENGINE THAT ANY TOOLS OR RAGS USED DURING MAINTENANCE HAVE BEEN REMOVED FROM THE AREA.

- The 150A and 120A Alternator belt is self-adjusting

11. Belt Maintenance

WARNING:

SEVERE HAZARD! KEEP HANDS AND OTHER BODY PARTS AWAY FROM MOVING/ROTATING PARTS. WEAR TIGHT FITTING CLOTHING AND KEEP YOUR HAIR SHORT OR TIE BACK. REMOVE ALL JEWELLERY BEFORE COMMENCING WORK. CHECK BEFORE STARTING THE ENGINE THAT ANY TOOLS OR RAGS USED DURING MAINTENANCE HAVE BEEN REMOVED FROM THE AREA.

- Ensure the ignition key is removed before carrying out any maintenance.
- Turn the battery master switch to the off position before carrying out any maintenance.
- Do not allow oil to contact the belt. Oil attacks the construction of the belt. This reduces the drive efficiency and ultimately cause it to fail prematurely.
- Replace the belt if it cracks or splits and as the adjustment nears the limit of travel.

Some boat builders may remove one or more of the alternators during the installation of the engine. It is essential that when the alternators are refitted that the alignment is perfect or premature belt wear will occur.

12. Belt Replacement

WARNING:

SEVERE HAZARD! KEEP HANDS AND OTHER BODY PARTS AWAY FROM MOVING/ROTATING PARTS. WEAR TIGHT FITTING CLOTHING AND KEEP YOUR HAIR SHORT OR TIE BACK. REMOVE ALL JEWELLERY BEFORE COMMENCING WORK. CHECK BEFORE STARTING THE ENGINE THAT ANY TOOLS OR RAGS USED DURING MAINTENANCE HAVE BEEN REMOVED FROM THE AREA.

- Ensure the ignition key is removed before replacing any belts.
- Turn the battery master switch to the off position before replacing any belts.
- Insert a ½" drive "T" bar into the square recess of the automatic tensioner.
- Pull lever bar in anti-clockwise direction to slacken off the belt.
- Remove the belt.
- Pull lever bar anti-clockwise again and refit the belt
- Check that the belt is fitted correctly into all of the pulley grooves.

The tensioner brace bar will need to be removed before the old belt can be removed. Refit the tensioner brace bar after the new belt has been fitted.

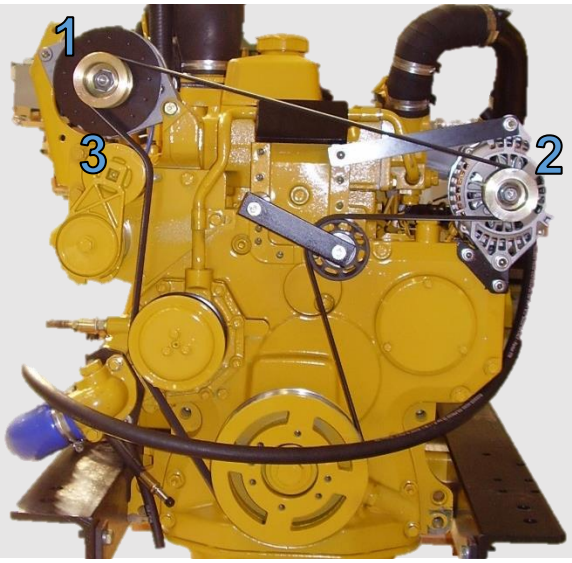

Figure 16: Shire 90 Alternator Belt

	Description
1	120A Alternator
2	150A Alternator
3	Automatic Adjuster

13. Control Panel Maintenance

WARNING:

REMOVE THE IGNITION KEY BEFORE WORKING IN ENGINE COMPARTMENT.
TURN BATTERY ISOLATION SWITCHES OFF.

- **To replace an illumination bulb:** Release the panel from its mounting. The bulbs are accessible from the rear of the panel. Remove the wires, unscrew the nut and pull out the bulb housing from the panel. Remove the bulb and replace. Refit bulb housing, screw the nut back up and refit the wires.
- **To replace any gauge:** Release the panel from its mounting. The gauges are accessible from the rear of the panel. Unplug the wire connectors, unscrew and pull the gauge out of the panel. Replace the gauge and refit. Reattach the wiring connectors.

Periodically squirt a lubricant into the key switch slot when the key has been removed (see Section 8 – Service Schedule). A lubricant such as WD40 – with silicon, would be suitable. Other lubricants are available. Then with the battery master switch turned off, operate the key switch a couple of times. This will ensure the lubricant works into the mechanism.

SECTION 8 – Service Schedule

NOTICE:

REFER TO THE JOHN DEERE MANUAL PRIOR TO CARRYING OUT ANY SERVICE OR MAINTENANCE WORK.

WARNING:

PRIOR TO CARRYING OUT ANY SERVICE OR MAINTENANCE WORK MAKE SURE THE RELEVANT PERSONAL PROTECTION EQUIPMENT IS WORN.

1. Specifications and Capacities

Specification of Coolants and Lubricants to use:

Component	Lubricant
Engine	John Deere Specification Oil
Coolant	John Deere Cool Gard (ready mixed)
Gearbox	Engine Oil or SAE 10W 40 API Class CD Oil

Engine Oil Capacity (with Filter):

Engine	Capacity (Litres)	Capacity (Pints)
Shire 90	14.7	40

Gearbox Oil Capacity (Including Cooler):

Gearbox	Capacity (Litres)	Capacity (Pints)
PRM 280	2.2	3.9
PRM 500	3	5.3

2. Service Intervals

	Check	Change	Notes
Engine Oil & Filter	Daily (Level)	Every 250 Hours OR 12 Months*	First change after 50 hours
Gearbox Oil	Weekly (Level)	Every 250 Hours OR 12 Months*	First change after 25 hours
Coolant Level	Daily (Level)	Every 24 Months	-
Diesel Fuel Filter – Primary & Engine**	50 Hours	At first 50 hour service and then every 500 hours OR 12 Months*	Drain water every 50 hours OR Monthly***
Air Filter Element	250 Hours	Every 500 hours OR 24 Months*	Sooner if required.
Shire 90 Inner Air Filter Element	200 Hours	Every 500 hours OR 36 Months*	-
Drive Belts	Daily	As required	Adjust as necessary
All Hoses	50 Hours	As required	Check hoses for damage or leaks. Replace as necessary
Key Switch	Lubricate	Every 150 hours OR 12 Months*	As per instructions in Section 7 - Service Procedure

* Whichever occurs first.

** Only original filters which meet the Recreational Craft Directive should be fitted to your engine

*** If large quantities of water are found in the fuel when the filter is drained, increase the frequency of draining.

- Refer to the John Deere Engine Manual for further information.
- Engine oil is available from Barrus in a 20 litre container. The part number is VC83070-020.
- Engine coolant (John Deere Cool Gard) is available from Barrus in a 20 litre container. The part number is EPH76215-020.

Please be aware that failure to use John Deere approved oils and coolants will invalidate any warranty.

SECTION 9 – Wiring Diagrams

1. Engine Wiring Diagram Shire 90

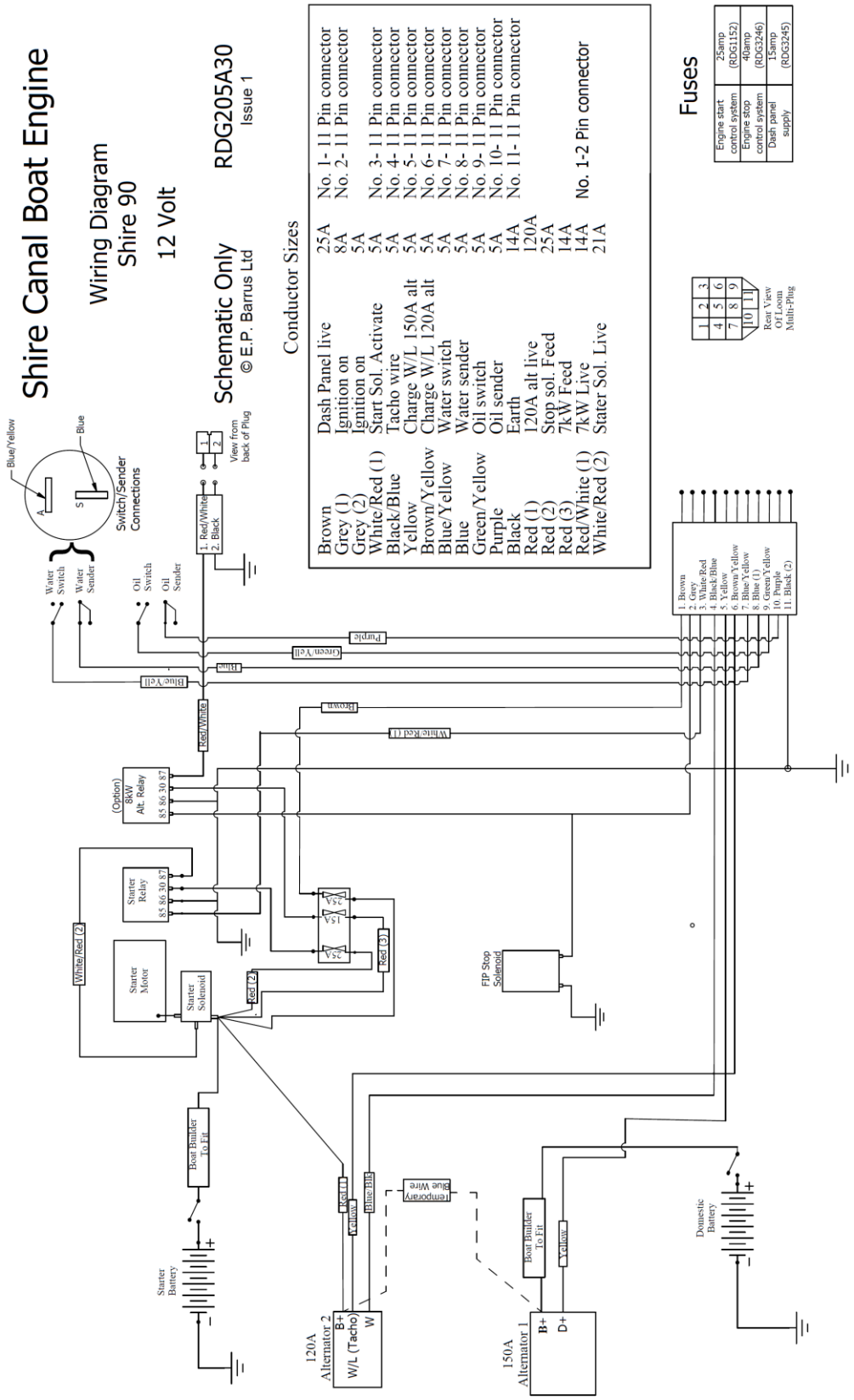

Figure 17: Shire 90 Wiring Diagram

2. Deluxe Control Panel Wiring Diagram

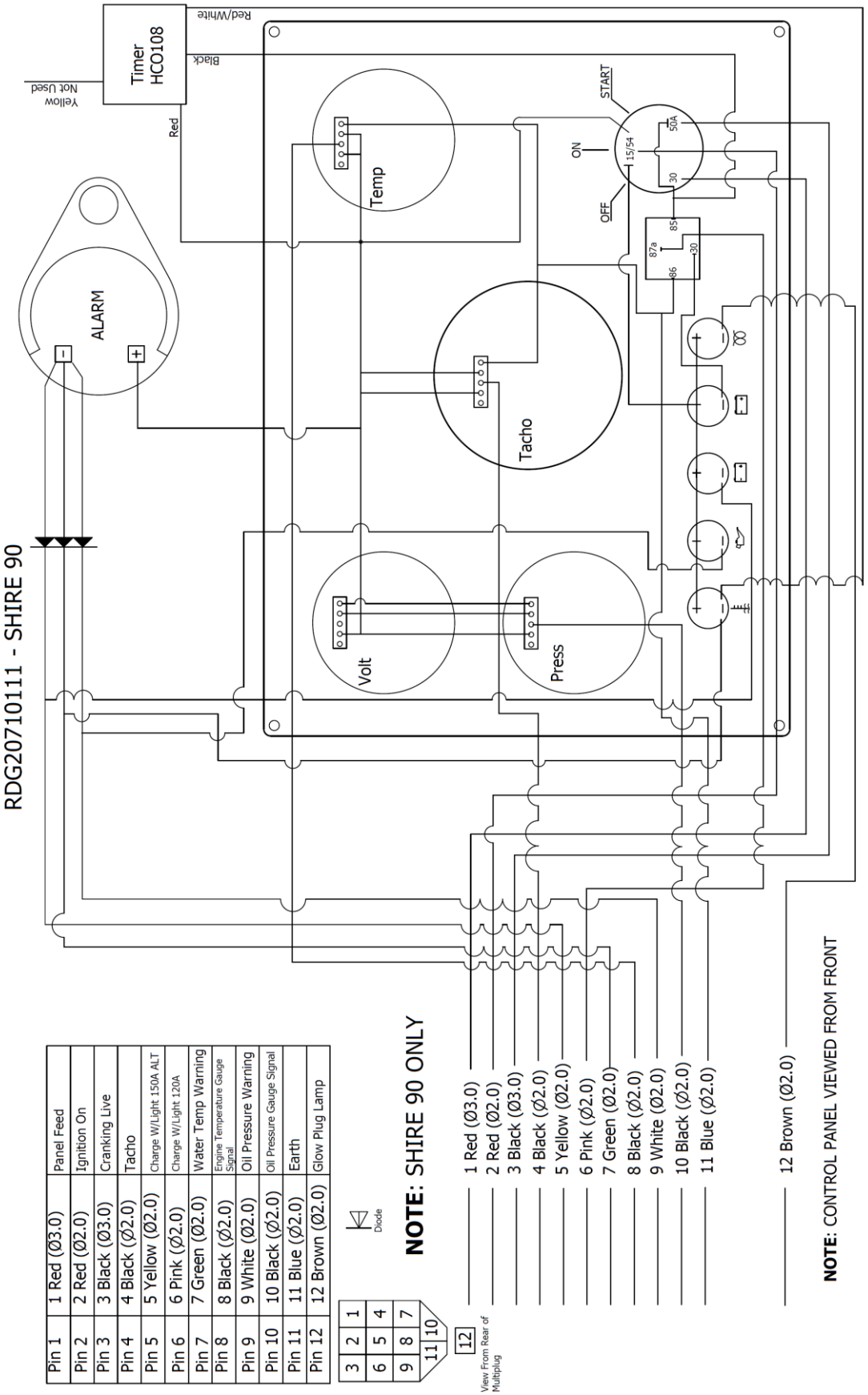

Figure 18: Deluxe Control Panel Wiring Diagram

3. 8kW Travel Power Wiring Diagram and Overall Dimensions

DANGER:

ELECTRIC SHOCK RISK! ALL HIGH VOLTAGE WIRING SYSTEMS SHOULD BE INSTALLED BY A QUALIFIED ELECTRICIAN.

Travel Power AC systems installed by qualified electrician and to BMEA code of practice for Electrical and Electronic installation in Boats: BS EN ISO 13297 (ac)

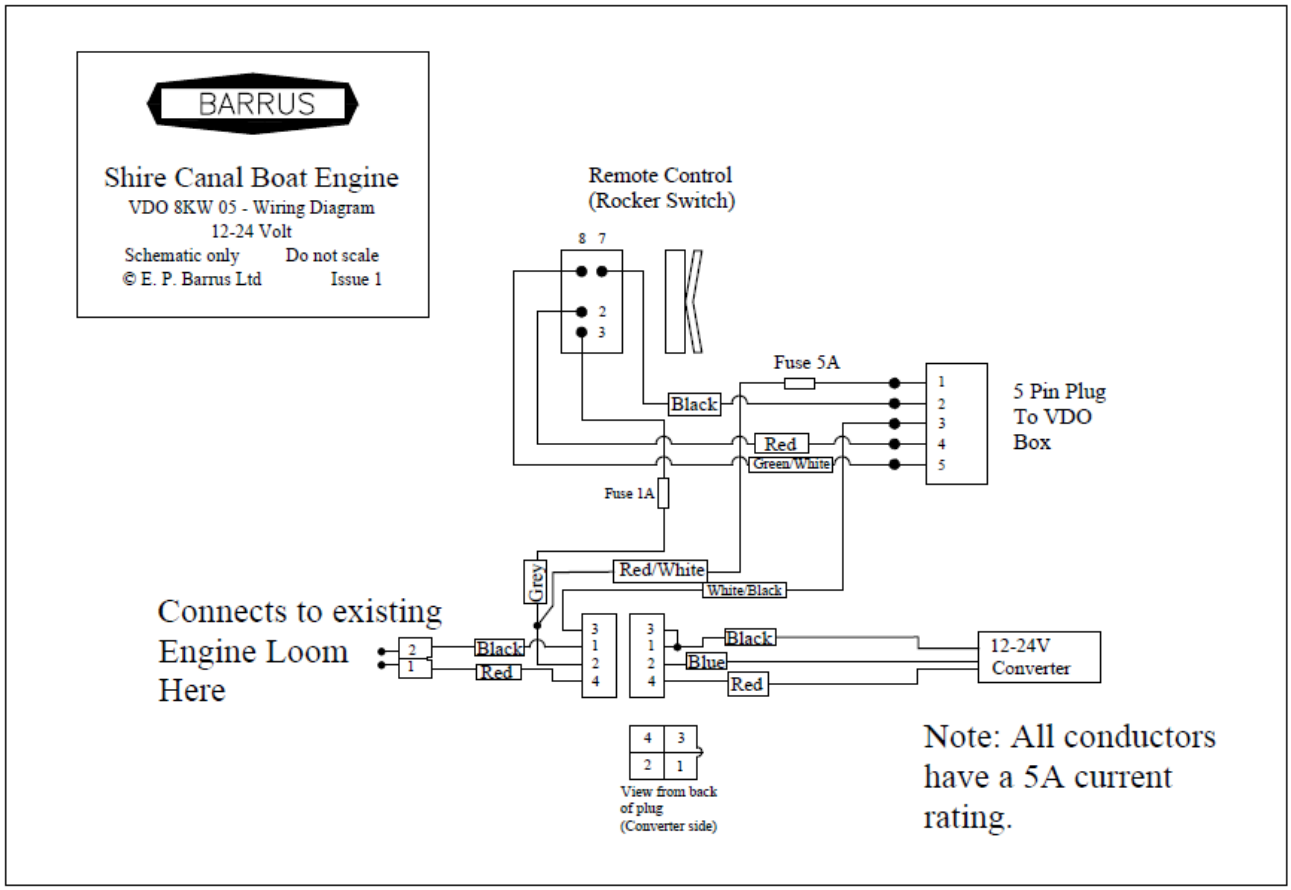

Figure 19: Travel Power wiring diagram

Figure 19 shows the 12/24 volt part of the wiring for the 8kW Travel Power system. For the 230 volt wiring diagram please refer to the Travel Power manual.

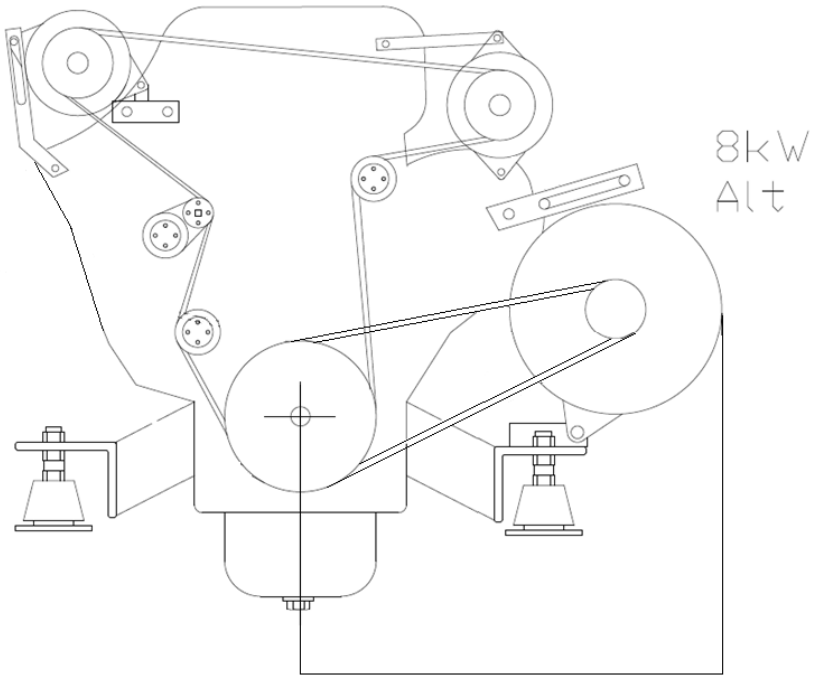

400

Figure 20: Shire 90 Travel Power dimensions

4. 5kW Travel Power System

- This unit is energised by a 12v ignition operated supply. The installer can wire to a convenient plug on the existing loom for this purpose.
- When the 12v relay (RDG1396) is placed into the spare relay holder on the engine, the black two way plug is energised when the ignition is turned on.
- The wire colours in the plug are: Black – Earth
  Red – Live

5. Prestolite 24 Volt 120 Amp Alternator Wiring Diagram

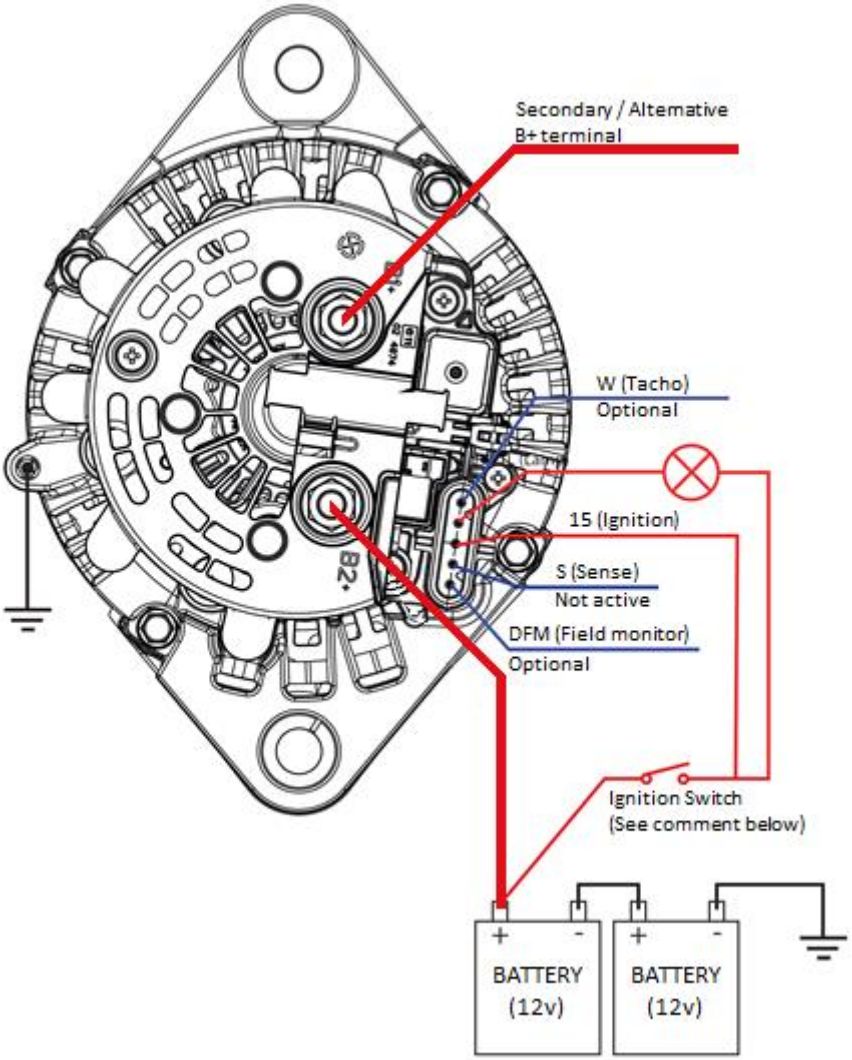

Figure 21: 24v 120A Alternator Wiring

Before wiring the 24 Volt 120 Amp Alternator please read the information below:

- The S (Sense) terminal is not active on the AVI147J3110HD or AVI147J3113HD models so does not need connecting (on those two models).
- The W (Tacho) is an option (when a rev counter is fitted) and is not required for alternator functionality.
- The DFM (Field Monitor) usage is dependent on the engine and is not required for alternator functionality.
- The Terminal 15 (Ignition) provides excitation and **MUST** be connected.
- The L (Warning Lamp) is an option (when a warning lamp is fitted) and is not required for alternator functionality.

- The alternator is fitted with two B+ terminals. Either of the B+ terminals can be used.
- The alternator is earth return (grounded) Ensure there is a good earth connection to the engine.

A 12v ignition operated relay may be required to switch on the 24v supply to Terminal 15 if the alternator is a stand alone item fitted to a 12v engine.

SECTION 10 – Technical Data

1. Engine Data

Engine Model	**Shire 90 - 4045TF280**
Type	Vertical In-Line Diesel Engine
Combustion System	Direct Injection
Aspiration	Turbocharged
Number of Cylinders	4
Bore x Stroke	106 x 127mm
Displacement	4.5L
Rated Output/Speed	67kW (90hp) at 2400 rpm
Low Idling	850-875 rpm
High Idling	2600 ±25 rpm
Direction of Rotation	Counter clockwise, viewed from Flywheel End
Normal Oil Pressure at Rated Engine Speed	0.34 MPa / 3.45 bar / 40 – 50 psi
Normal Oil Pressure at Low Idle Speed	0.105 MPa / 1.05 bar / 15 psi
Electric Starting System	Starter Motor: DC12V
	Starter Capacity: 3.4kw
	Recommended Start Battery Capacity: 12V 90Ah
Valve Clearances (Exhaust and Inlet)	0.36 – 0.46mm

2. Return Diesel System

Maximum Fuel Temp	25.5°c
Maximum Flow	1 Litre / Min (2400 rpm)
Flow at Idle	0.25 Litre / Min

3. Dry Weight of Engine Data

Dry Weight of Engine (Including Gearbox)*	
Model	**Dry Weight (kg)**
Shire 90	525kg

* The dry weights stated are for the standard engine in each model range. If a different gearbox or additional alternators are ordered the weight will change accordingly.

SECTION 11 – Dealer List

Area	Company	Telephone	Email
BERKSHIRE	Bluenine Marine	01189 406482	info@blueninemarine.co.uk
	Driveline Marine	0118 942 3877	tam@drivelinemarine.com
	Marcus Marine Engineering Ltd (Servicing, Repairs & Breakdowns only)	07900890911	Marcus@marcusmarine.co.uk
BRISTOL	Advance Marine	01275 815910	phil@advancemarine.co.uk
CHESHIRE	Midland Chandlers	01928 751 800	preston.brook@midlandchandlers.co.uk
	Nantwich Canal Centre Ltd	01270 625122	info@nantwichcc.com
CUMBRIA	Windermere Aquatic Ltd	01539 442121	service@aquaticboatcentres.com
DERBYSHIRE	Midland Chandlers	01283 701445	willington@midlandchandlers.co.uk
DEVON	Sleeman & Hawken Ltd	01626 778266	sales@sleeman-hawken.co.uk
ESSEX	French Marine Motors Ltd	01206 305233 01255 850303	info@frenchmarine.com
HAMPSHIRE	Marine Power Ltd	0238 0403918	sales@marine-power.co.uk
HERTFORDSHIRE	Lee Valley Marina	01920 870499 01920 293101	stansteadmarina@vibrantpartnerships.co.uk
	Keypart Ltd	01923 276000	sales@keypart.com
LEICESTERSHIRE	Foxton Boat Services Ltd	01162 792285	foxtonboats@btinternet.com
LONDON	Lee Valley Marina	020 88061717	springfieldmarina@vibrantpartnerships.co.uk
MIDDLESEX	Lindon Lewis Marine	01932 247427	service@pushtheboatout.com
NORTHAMPTON	Grand Junction Boat Co.	01604 858043	info@boatrepairs.uk.com
	Midland Chandlers	01788 891401	braunston@midlandchandlers.co.uk
NOTTINGHAM	Farndon Marina	01636 705483	info@farndonmarina.co.uk
STAFFORDSHIRE	JD Boat Services Ltd	01902 791811	david@jdboats.co.uk
	Midland Chandlers	01785 712437	penkridge@midlandchandlers.co.uk
	Stone Boatbuilding Company	01785 812688	stonechandlery@aol.com
	Streethay Wharf	01543 414808	office@streethaywharf.co.uk
WARWICKSHIRE	Springwood Haven Leisure Ltd	0845 4566572	enquiries@springwoodhaven.co.uk
WILTSHIRE	Devizes Marina	01380 725300	sales@devizesmarina.com

WORCESTERSHIRE	Crafted Boats Ltd	01527 876438	craftedboats@btconnect.com
	Evesham Marina	01386 768500	info@eveshammarina.co.uk
YORKSHIRE	Rodley Boat Centre	01132 576132	rodleyboatcentre@msn.com
MONMOUTHSHIRE	Castle Narrowboats	01873 830001	info@castle.narrowboats.co.uk
EIRE	Southshore Marina & Diesel Ltd	028383 41010	info@southshoremarine.co.uk

SECTION 12 – Shire Parts

Primary Fuel Filter	RDG9188346
Secondary Fuel Filter	RE62418
Alternator Main Drive Belt	RDG0047272
3.5kW Alternator Belt (Option)	RDG0047581
5kW Alternator Belt (Option)	RDG6816
8kW Alternator Belt (Option)	RDG6830
Inner Air Filter Element	RDG6651
Outer Air Filter Element	RDG6650
Oil Filter	RE504836

Control Panel:

Deluxe Control Panel	RDG20710111

Fuses:

The electrical system is fitted with three or four blade type fuses:

	Shire 90
Control Panel Supply	25 amp (RDG1152)
Engine Start Control System	25 amp (RDG1152)
Optional 8kW Travel Power	15 amp (RDG3245)

Engine Oil and Coolant:

- Engine oil is available from Barrus in a 20 litre container. The part number is VC83070-020.
- Engine coolant (John Deere Cool Gard) is available from Barrus in a 20 litre container. The part number is EPH76215-020.

Please be aware that failure to use John Deere approved oils and coolants will invalidate any warranty.

Diesel Fuel Additive:

Diesel fuel additive is available from your Shire Dealer in a handy 500ml container (Part No RDG80210219).

Shire Parts Book:

On the E.P Barrus Website there is a Shire 90 Parts Book which has a more extensive list of parts available for your engine. To access the Shire Parts Books on the internet type the following short link into your search engine:

https://www.barrus.co.uk/shire-parts/

SECTION 13 – Declarations

1. Declaration of Conformity for Recreational Craft Propulsion Engine with the requirements of Directive 2013/53/EU.

Name of Engine Manufacturer: **E.P.Barrus LTD**

Name of Authorised Representative: **E.P.Barrus LTD**
Address: **E.P.Barrus LTD, Launton Road, Bicester, Oxon, OX26 4UR, England, United Kingdom**

Engine type approved according to: Stage IIIA of Directive 97/68/EC, 88/77/EC

Name of Notified Body for exhaust emission assessment: United States Environmental Protection Agency
Address: Office of Transportation and Air Quality
Town: Michigan Post Code: 48105 Country: USA ID Number: BCHCL1.12AAA-002

Conformity assessment module used for exhaust emissions: ☐ B+C ☐ B+D ☐ B+E ☐ B+F ☐ G ☐ H
Or engine type-approved according to: ☑ stage II of Directive 97/68/EC ☑ Directive 88/77/EC
Other Community Directives applied:

Description of Engine(s) and Essential Requirements

Engine Type: Inboard Engine **Fuel Type**: Diesel **Combustion Cycle**: 4 Stroke

Identification of Engine(s) covered by this Declaration of Conformity

Engine Model	**Engine Type**	**Engine Family code**	**Type Approval Certificate Number**
Shire 90	4045TF280	BJDXL04.5112	E11*97/68JA*2004/26*0950*00

Essential Requirements	Standards	Other normative document/method.	Technical file	Specify in more detail *= Mandatory standard.
Annex 1.B- Exhaust Emissions				
B.1 Engine Identification	☐	☐	☐	
B.2 Exhaust emission requirements	☐*	☑	☐	* EN ISO 8178
B.3 Durability	☐	☐	☐	
B.4 Owner's Manual	☑	☐	☐	ISO10240
Annex 1. C- Noise Emissions	See Declaration of Conformity of the craft in which the engine(s) has(have) been installed			

This declaration of conformity is issued under the sole responsibility of the manufacturer. I declare on behalf of the engine manufacturer that the engine(s) [is (are) in conformity with the type(s) for which above mentioned EC type-examination or type approval certificate(s) has (have) been issued and][1] will meet the exhaust emission requirements of Directive 94/25/EC as amended by Directive 2003/44/EC when installed in a recreational craft, in accordance with the engine manufacturer's supplied instructions and that this (these) engine(s) must not be put into service until the recreational craft which it is (they are) to be installed has been declared in conformity with the relevant provisions of the above mentioned Directives.

Tim Hart
Sales Director
Signed: Bicester, UK
Date: 08/09/2016

2. Declaration of Incorporation of Partly Completed Machinery

(Original declaration according to Directive 2006/42/EC, Annex II, part 1B)

<table>
<tr><td>1. The manufacturer:</td><td colspan="4">E. P. Barrus Limited
Glen Way
Launton Road
Bicester
OX26 4UR
England
United Kingdom</td></tr>
<tr><td>2. Authorised Compiler of Relevant Technical Documentation:</td><td colspan="4">Mr. Graeme Aldridge
Glen Way
Launton Road
Bicester
OX26 4UR
England
United Kingdom</td></tr>
<tr><td rowspan="4">3. Partly Completed Machinery:</td><td>Designation:</td><td colspan="3">Marine engines for propulsion of, and incorporation into, watercraft.</td></tr>
<tr><td rowspan="2">Description:</td><td></td><td>Serial No.:</td><td rowspan="2">and it's derivatives.</td></tr>
<tr><td>Shire 90</td><td>XX-2400-X</td></tr>
<tr><td>Base Engine:</td><td colspan="3">John Deere 4045TF280-BME</td></tr>
<tr><td colspan="5">4. The essential health and safety requirements of the Directive 2006/42/EC, Annex I, relating to the design and construction of the engines have been applied and fulfilled as shown in Annex A of this Declaration. The relevant technical documentation is compiled in accordance with part B of Annex VII of the Directive. The engines also comply with measures against the emission of gaseous and particulate pollutants from internal combustion engines to be installed in non-road mobile machinery contained in the Directives 97/68/EC, amended by 2002/88/EC and 2004/26/EC.
The engines also comply with Directive 2013/53/EU (Recreational Craft Directive), Article 6, part 4 in that the engine will continue to meet the exhaust emission requirements of either Directive 97/68/EC or of Regulation (EC) No 595/2009, as declared above, when installed in accordance with the installation instructions that accompany the engine.</td></tr>
<tr><td colspan="5">5. In case of a reasoned request by the national authority, we will supply the relevant technical information of the above named engines to the person in charge.</td></tr>
<tr><td colspan="5">6. This partly completed machinery must not be put into service until the final machinery into which it has been incorporated has been declared in conformity with the provisions of this directive, where appropriate.</td></tr>
<tr><td colspan="5">7. This declaration is made on 08 September 2016 in Bicester, Oxfordshire.</td></tr>
<tr><td colspan="5">
Tim Hart
Sales Director
E. P. Barrus Limited</td></tr>
</table>

ANNEX A

The essential health and safety requirements for machinery can only be made compliant partly by Barrus. Therefore Barrus recommends to double-check the paragraphs from Annex 1 of the Directive 2006/42/EC mentioned below for compliance with the Directive for your particular machine.

Chapter	Subject	Applied	Fulfilled	Remark
1.1 GENERAL REMARKS				
1.1.2	Principles Of safety Integration	Yes *1	Yes*1	Consult accompanying manuals for instructions on safe installation.
	*1 For the following principles mentioned in the Directive: (a) the design and construction is fit for function as a marine engine; (b) risks have been eliminated or reduced as far as possible; Principles (c), (d) and (e) require measures to be taken by the boat builder for compliance with the directive.			
1.1.3	Materials and Products	Yes *2	Yes *2	
	*2 The engine has been designed and built using materials which are not known to present a hazard to safety or health. Use recommended fluids and filling positions only. Refer to manual for further information. Other materials used during the installation are to be designed and assessed by the boat builder.			
1.1.4	Lighting	Not Applicable		By boat builder/installer.
1.1.5	Design of machinery to facilitate its handling	Yes	Yes	All engines have appropriate packaging and lifting eyes
1.1.6	Ergonomics	Not Applicable		By boat builder/installer.
1.1.7	Operating Positions			
1.1.8	Seating			
1.2 CONTROL SYSTEMS				
1.2.1	Safety and reliability of control systems	Yes *3	No *3	
	*3 The control systems are designed and constructed to withstand the intended operating stresses and external influences, a fault in the hardware or software of the control system, errors in the control system logic, or reasonably foreseen human error during operation does not lead to hazardous situations. The operation of the control systems is to be designed and implemented by the boat builder. Contact Barrus for advice if required.			
1.2.2	Control devices	Yes *4	No *4	
	*4 The engine is fitted with the basic required control devices. The location and operation of this, and other, control systems is to be designed and implemented by the boat builder. Contact Barrus for advice if required.			
1.2.3	Starting	Yes *5	No *5	Starter motor installed
	*5 The operation of the starting system is controlled by a key switch on the panel. Contact Barrus for advice if required. The location and operation of this, and other, control systems is to be designed and implemented by the boat builder. Contact Barrus for advice if required.			
1.2.4.1	Normal stop	Yes *6	No *6	
	*6 The operation of the starting system is controlled by a key switch on the panel. The engine is fitted with a control device (energized to run stop solenoid) whereby it can be brought safely to a complete stop. The location and operation of this, and other, control systems is to be designed and implemented by the boat builder. Contact Barrus for advice if required.			
1.2.4.2	Operational stop	Not applicable		By boat builder/installer.
1.2.4.3	Emergency stop			
1.2.4.4	Assembly of machinery			
1.2.5	Selection of control or operating modes			
1.2.6	Failure of power supply			

1.3 PROTECTION AGAINST MECHANICAL HAZARDS				
1.3.1	Risk of loss of stability	Yes *7	Yes *7	
	*7 Lifting eyes are provided on the engine. The secure and stable installation of engine is to be carried out by the boat builder/installer.			
1.3.2	Risk of break-up during operation	Yes *8	Yes *8	
	*8 Instructions to indicate the type and frequency of inspections and maintenance required for safety reasons are in the accompanying manual. The mounting, positioning and/or guarding of parts where a risk of rupture or disintegration remains (in particular V-belts and pulleys), are to be made compliant by the boat builder/installer.			
1.3.3	Risks due to falling or ejected objects	Not applicable		
1.3.4	Risks due to surface edges or angles	Yes	Yes	
1.3.5	Risks related to combined machinery	Not applicable		By boat builder/installer.
1.3.6	Risks related to variations in operating conditions			
1.3.7	Risks related to moving parts	No	No	By boat builder/installer.
1.3.8	Choice of protection against risks arising from moving parts	No	No	
1.3.8.1	Moving transmission parts	No	No	
1.3.8.2	Moving parts involved in the process	Not applicable		By boat builder
1.3.9	Risks of uncontrolled movements			
1.4 REQUIRED CHARACTERISTICS OF GUARDS AND PROTECTIVE DEVICES				
1.4.1	General requirements	No	No	Guards to be specified and fitted by the boat builder/installer.
1.4.2.1	Fixed guards	No	No	
1.4.2.2	Interlocking movable guards	Not applicable		By boat builder/installer.
1.4.2.3	Adjustable guards restricting access			
1.4.3	Special requirements for protective devices			
1.5 RISKS DUE TO OTHER HAZARDS				
1.5.1	Electricity supply	Not applicable		By boat builder
1.5.2	Static electricity	Not applicable		By boat builder
1.5.3	Energy supply other than electricity	Yes *9	Yes *9	This concerns the fuel injection system and gearbox hydraulic system where fitted.
	*11 For the fuel filter, fuel injection pump, fuel injection nozzles, high pressure fuel injection pipes and fuel hoses supplied and installed on the engine by Barrus. Any other fuel system parts connected to the engine to be made compliant by the boat builder/installer.			
1.5.4	Errors of fitting	No	No	Fitting or refitting should only be done by trained and skilled personnel.
1.5.5	Extreme temperatures	Yes *10	Yes *10	Protection or warnings to be made by the boat builder
	*10 'Hot Surface' warning stickers are affixed to the rocker cover. All other protection or warnings to be made by the boat builder			
1.5.6	Fire	No	No	By boat builder
1.5.7	Explosion	No	No	

1.5.8	Noise	No	No	
1.5.9	Vibrations	No	No	
1.5.10	Radiation	No	No	
1.5.11	External radiation	Yes	Yes	
1.5.12	Laser radiation	Not applicable		
1.5.13	Emissions of hazardous materials and substances	Yes *11	Yes *11	
	*11 Except for the exhaust, fuel, and cooling water system which needs to be properly connected by the boat builder or installer according to the instructions.			
1.5.14	Risk of being trapped in a machine	Not applicable		By boat builder/installer.
1.5.15	Risk of slipping, tripping or falling			
1.5.16	Lightning			
1.6 MAINTENANCE				
1.6.1	Machinery maintenance	Yes	Yes	
1.6.2	Access to operating positions and servicing points	Not applicable		By boat builder/installer.
1.6.3	Isolation of energy sources			
1.6.4	Operator intervention			
1.6.5	Cleaning of internal parts	Yes	Yes	
1.7 INFORMATION				
1.7.1	Information and warnings on the machinery	Yes *12	Yes *12	
	*12 A 'Refer to manual before carrying out engine installation, operation and maintenance' label is fitted to the engine. 'Hot Surface' warning stickers are fitted on surfaces that may become hot during operation. All other protection or warnings to be made by the boat builder/installer.			
1.7.1.1	Information and information devices	Yes *13	Yes *13	
	*13 The control panel is simple to understand and use. Other control measures and information on the use of the machinery is to be carried out by the boat builder/installer.			
1.7.1.2	Warning devices	Yes *14	Yes *14	
	*14 The control panel provides warnings. The location and installation of the control panel is to be carried out by the boat builder/installer.			
1.7.2	Warning of residual risks	No	No	By boat builder/installer.
1.7.3	Marking of machinery	Yes *15	No *15	
	*15 The engine is CE marked with a brand, model designation and serial number. Full CE compliance to be carried out by the boat builder/installer.			
1.7.4	Instructions	Yes	Yes	
1.7.4.1	General principles for the drafting of instructions	Yes *16	Yes *16	
	*16 For (a) and (b). The boat builder/installer to comply with (c) and (d) for the total machine and use of it			
1.7.4.2	Contents of the instructions	Yes *17	Yes *17	
	*17 For (a), (b), (d), (e), (g), (h), (i), (k), (p), (r), (s), (t). The boat builder/installer to comply with (c), (d), (f), (g), (h), (i), (j), (l), (m), (n), (o), (q), (u), (v).			
1.7.4.3	Sales literature	Yes	Yes	

3. EU Declaration of Conformity with the Exhaust Emissions Requirements of Directive 2013/53/EU

(Original declaration according to Directive 2013/53/EU)

<table>
<tr><td>1. The manufacturer:</td><td colspan="4">E. P. Barrus Limited
Glen Way
Launton Road
Bicester
OX26 4UR</td></tr>
<tr><td>2. Authorised Compiler of Relevant Technical Documentation:</td><td colspan="4">Mr. Graeme Aldridge
Glen Way
Launton Road
Bicester
OX26 4UR</td></tr>
<tr><td rowspan="4">3. Partly Completed Machinery:</td><td>Designation:</td><td colspan="3">Marine engines for propulsion of, and incorporation into, watercraft.</td></tr>
<tr><td rowspan="2">Description:</td><td></td><td>Serial No.:</td><td rowspan="2">and their derivatives.</td></tr>
<tr><td>Shire 90</td><td>XX-2400-X</td></tr>
<tr><td>Base Engine:</td><td colspan="3">John Deere 4045TF280-BME</td></tr>
<tr><td colspan="5">4. The engines detailed in section 3 comply with measures against the emission of gaseous and particulate pollutants from internal combustion engines to be installed in non-road mobile machinery contained in the Directives 97/68/EC, as amended by 2002/88/EC and 2004/26/EC in that they are type-approved in accordance with stage IIIA of those directives.
The engines comply with Directive 2013/53/EU (Recreational Craft Directive), Article 6, part 4 in that the engine will continue to meet the exhaust emission requirements of Directives 97/68/EC, as amended by 2002/88/EC and 2004/26/EC, as declared above, when installed into watercraft in accordance with the installation instructions that accompany the engine.</td></tr>
<tr><td colspan="5">5. In case of a reasoned request by the national authority, we will supply the relevant technical information of the above named engines to the person in charge.</td></tr>
<tr><td colspan="5">6. This partly completed machinery must not be put into service until the final machinery into which it has been incorporated has been declared in conformity with the provisions of this directive, where appropriate.</td></tr>
<tr><td colspan="5">7. This declaration is made on 08 September 2016 in Bicester, Oxfordshire.</td></tr>
<tr><td colspan="5">
Tim Hart
Sales Director
E. P. Barrus Limited</td></tr>
</table>

SECTION 14 – Lubricant Safety Data Sheets

1. Torq-Gard Supreme 15W40

SAFETY DATA SHEET
Torq-Gard Supreme 15W-40

1. IDENTIFICATION OF THE SUBSTANCE/PREPARATION AND COMPANY/UNDERTAKING

Product Code	901L0611
Infosafe No.	ACNUV GB/eng/C
Issued Date	25/10/2006
Product Type/Use	Engine oil.

Supplier	**Telephone Numbers**
	Emergency Tel.
Deere & company European office Steubenstrasse 36-42 68163 Mannheim GERMANY	+1 352 323 3500 ***Telephone/Fax Number*** Tel: +49 621 829 01

2. COMPOSITION/INFORMATION ON INGREDIENTS

Preparation Description
Highly refined mineral oils and additives. The highly refined mineral oil contains <3% (w/w) DMSO-extract, according to IP346.

Dangerous Components / Constituents
Exposure limits apply to the following components: Highly refined mineral oil.

Name	CAS	EINECS	Proportion	Hazard	R Phrase
Zinc alkyl dithiophos-phate	68649-42-3	272-028-3	1-2.49 %	Xi, N	R38, R41, R51/53

Other Information
See Section 16 'Other Information' for full text of each relevant Risk Phrase.

3. HAZARDS IDENTIFICATION

EC Classification	Not classified as Dangerous under EC criteria.

Human Health Hazards
No specific hazards under normal use conditions. Prolonged or repeated exposure may give rise to dermatitis. Used oil may contain harmful impurities.

Safety Hazards
Not classified as flammable, but will burn.

Environmental Hazards
Not classified as dangerous for the environment.

4. FIRST AID MEASURES

Symptoms and Effects
Not expected to give rise to an acute hazard under normal conditions of use.

Inhalation
In the unlikely event of dizziness or nausea, remove casualty to fresh air. If symptoms persist, obtain medical

attention.

Skin
Remove contaminated clothing and wash affected skin with soap and water. If persistent irritation occurs, obtain medical attention. When using high pressure equipment, injection of product under the skin can occur. If high pressure injuries occur, the casualty should be sent immediately to a hospital. Do not wait for symptoms to develop.

Eye
Flush eye with copious quantities of water. If persistent irritation occurs, obtain medical attention.

Ingestion
Wash out mouth with water and obtain medical attention. Do not induce vomiting.

Advice to Doctor
Treat symptomatically. Aspiration into the lungs may result in chemical pneumonitis. Dermatitis may result from prolonged or repeated exposure. High pressure injection injuries require prompt surgical intervention and possibly steroid therapy, to minimise tissue damage and loss of function.
Because entry wounds are small and do not reflect the seriousness of the underlying damage, surgical exploration to determine the extent of involvement may be necessary. Local anaesthetics or hot soaks should be avoided because they can contribute to swelling, vasospasm and ischaemia. Prompt surgical decompression, debridement and evacuation of foreign material should be performed under general anaesthetics, and wide exploration is essential.
There may be a risk to health where low viscosity products are aspirated into the lungs following vomiting, although this is uncommon in adults. Such aspiration would cause intense local irritation and chemical pneumonitis. Children, and those in whom consciousness is impaired, will be more at risk. Emesis of lubricants is not usually necessary, unless a large amount has been ingested, or some other compound has been dissolved in the product. If this is indicated, for example, when there is rapid onset of central nervous system depression from large ingested volume - gastric lavage under controlled hospital conditions, with full protection of the airway is required. Supportive care may include oxygen, arterial blood gas monitoring, respiratory support, and, if aspiration has occurred, treatment with corticosteriods and antibiotics. Seizures should be controlled with Diazepam, or appropriate equivalent drug.

5. FIRE FIGHTING MEASURES

Specific Hazards
Combustion is likely to give rise to a complex mixture of airborne solid and liquid particulates and gases, including carbon monoxide and unidentified organic and inorganic compounds.

Extinguishing Media
Foam and dry chemical powder. Carbon dioxide, sand or earth may be used for small fires only.

Unsuitable Extinguishing Media
Water in jet. Use of halon extinguishers should be avoided for environmental reasons.

Protective Equipment
Proper protective equipment including breathing apparatus must be worn when approaching a fire in a confined space.

6. ACCIDENTAL RELEASE MEASURES

Personal Precautions
Avoid contact with skin and eyes. Wear PVC, Neoprene or nitrile rubber gloves. Wear rubber knee length safety boots and PVC Jacket and Trousers. Wear safety glasses or full face shield if splashes are likely to occur.

Environmental Precautions
Prevent from spreading or entering into drains, ditches or rivers by using sand, earth, or other appropriate barriers. Inform local authorities if this cannot be prevented.

Clean-up Methods - Small Spillages
Absorb liquid with sand or earth. Sweep up and remove to a suitable, clearly marked container for disposal in accordance with local regulations.

Clean-up Methods - Large Spillages
Prevent from spreading by making a barrier with sand, earth or other containment material. Reclaim liquid directly or in an absorbent. Dispose of as for small spills.

7. HANDLING AND STORAGE

Handling
Use local exhaust ventilation if there is risk of inhalation of vapours, mists or aerosols. Avoid prolonged or repeated contact with skin. When handling product in drums, safety footwear should be worn and proper handling equipment should be used. Prevent spillages. Cloth, paper and other materials that are used to absorb spills present a fire hazard. Avoid their accumulation by disposing of them safely and immediately. In addition to any specific recommendations given for controls of risks to health, safety and the environment, an assessment of risks must be made to help determine controls appropriate to local circumstances. Exposure to this product should be reduced as low as reasonably practicable. Reference should be made to the Health and Safety Executive's publication 'COSHH Essentials'.

Storage
Keep in a cool, dry, well-ventilated place. Use properly labelled and closeable containers. Avoid direct sunlight, heat sources, and strong oxidizing agents. The storage of this product maybe subject to the Control of Pollution (Oil Storage) (England) Regulations. Further guidance maybe obtained from the local environmental agency office.

Storage Temperatures
0ºC Minimum. 50ºC Maximum.

Recommended Materials
For containers or container linings, use mild steel or high density polyethylene.

Unsuitable Materials
For containers or container linings, avoid PVC.

Other Information
Polyethylene containers should not be exposed to high temperatures because of possible risk of distortion.

8. EXPOSURE CONTROLS, PERSONAL PROTECTION

Exposure Limits

Substance	Regulations	Exposure Duration	Exposure Limit	Units	Notes
Oil mist, mineral	EH 40 2005	TWA	5	mg/m3	
	EH 40 2005	STEL	10	mg/m3	

EH 40 2005 EH 40 2005 Health and Safety Executive. EH40; Workplace Exposure Limits

Exposure Controls
The use of personal protective equipment is only one aspect of an integrated approach to the Control Of Substances Hazardous to Health.
The management of Health and Safety at Work Regulations 1992 require employers to identify and evaluate the risks to health and to implement appropriate measures to eliminate or minimise those risks. The choice of personal protective equipment is highly dependent upon local conditions, e.g. exposure to other chemical substances and micro-organisms, thermal hazards (protection from extremes of cold and heat), electrical hazards, mechanical hazards and appropriate degree of manual dexterity required to undertake an activity. Whilst the content of this section may inform the choice of personal protective equipment used, the limitations of any information which can be provided must be fully understood, e.g. personal protective equipment chosen to protect employees from occasional splashes maybe entirely inadequate for activities involving partial or complete immersion.If the levels of oil mist or vapour in air are likely to exceed the occupational

exposure standards then consideration should be given to the use of local exhaust ventilation to reduce personal exposure.
The choice of personal protective equipment should only be undertaken in the light of a full risk assessment by a suitably qualified competent person (e.g. a professionally qualified occupational hygienist).
Effective protection is only achieved by correctly fitting and well maintained equipment and employers should ensure that appropriate training is given. All personal protective equipment should be regularly inspected and replaced if defective. Reference should be made to HSE's publication Methods for the Determination of Hazardous Substances (MDHS) 84 - Measurement of oil mist from mineral oil-based metalworking fluids. Measurement of an employee's exposure to oil vapour maybe supplemented through the use of stain tubes. In the first instance, further guidance maybe obtained through HSE's publication 'COSHH - a brief guide to the regulations' (INDG 136(rev1)).

Respiratory Protection
At standard temperature and pressure, the Occupational Exposure Standard for oil vapour is unlikely to be exceeded. Care should be taken to keep exposures below applicable occupational exposure limits. If this cannot be achieved, use of a respirator fitted with an organic vapour cartridge combined with a particulate pre-filter should be considered. Half masks (EN 149) or valved half masks (EN 405) in combination with type A2 (EN 141) and P2/3 (EN 143) pre-filters maybe considered.

Hand Protection
Chemical protective gloves are made from a wide range of materials, but there is no single glove material (or combination of materials) which gives unlimited resistance to any individual or combination of substances or preparations. The extent of the breakthrough time will be affected by a combination of factors which include permeation, penetration, degradation, use pattern (full immersion, occasional contacts) and how the glove is stored when not in use.
Theoretical maximum levels of protection are seldom achieved in practice and the actual level of protection can be difficult to assess. Effective breakthrough time should be used with care and a margin of safety should be applied. HSE guidance on protective gloves recommends a 75% safety factor to be applied to any figures obtained in a laboratory test. Nitrile gloves may offer relatively long breakthrough times and slow permeation rates. Test data, e.g breakthrough data obtained through test standard EN374-3:1994 are available from reputable equipment suppliers.
Personal hygiene is a key element of effective hand care. Gloves must only be worn on clean hands. After using gloves, hands should be washed and dried thoroughly. A non perfumed moisturiser should be applied.

Eye Protection
Goggles conforming to a minimum standard of EN 166 345B should be considered if there is a possibility of eye contact with the product through splashing. Higher rated eye protection must be considered for highly hazardous operations or work areas. For example, employees involved in metalworking operations such as chipping, grinding or cutting may require additional protection to avert injury from fast moving particles or broken tools.

Body Protection
Minimise all forms of skin contact. Overalls and shoes with oil resistant soles should be worn. Launder overalls and undergarments regularly.

Environmental Exposure Controls
Minimise release to the environment. An environmental assessment must be made to ensure compliance with local environmental legislation.

9. PHYSICAL AND CHEMICAL PROPERTIES

Colour	Amber.
Physical State	Liquid at ambient temperature.
Odour	Characteristic mineral oil.
pH Value	Data not available.
Vapour Pressure	<0.5 Pa at 20ºC (based on mineral oil).
Initial Boiling Point	Expected to be above 280°C.
Solubility in Water	Negligible.
Density	886 kg/m3 at 15ºC.
Flash Point	205ºC. (PMCC).
Flammable Limits - Upper	10% V/V (typical) (based on mineral oil).

Flammable Limits - Lower	1% V/V (typical) (based on mineral oil).
Auto-Ignition Temperature	Expected to be above 320ºC.
Kinematic Viscosity	105.1 mm2/s at 40ºC.
Evaporation Rate	Data not available.
Vapour Density (Air=1)	Greater than 1.
Partition co-efficient, n-octanol/water	Log Pow expected to be greater than 6.
Pour Point	-39ºC.

10. STABILITY AND REACTIVITY

Stability
Stable.

Conditions to Avoid
Extremes of temperature and direct sunlight.

Materials to Avoid
Strong oxidizing agents.

Hazardous Decomposition Products
Hazardous decomposition products are not expected to form during normal storage.

11. TOXICOLOGICAL INFORMATION

Basis for Assessment
Toxicological data have not been determined specifically for this product. Information given is based on a knowledge of the components and the toxicology of similar products.

Acute Toxicity - Oral
LD50 expected to be > 2000 mg/kg.

Acute Toxicity - Dermal
LD50 expected to be > 2000 mg/kg.

Acute Toxicity - Inhalation
Not considered to be an inhalation hazard under normal conditions of use.

Eye Irritation
Expected to be slightly irritating.

Skin Irritation
Expected to be slightly irritating.

Respiratory Irritation
If mists are inhaled, slight irritation of the respiratory tract may occur.

Skin Sensitisation
Not expected to be a skin sensitizer.

Carcinogenicity
Product is based on mineral oils of types shown to be non-carcinogenic in animal skin-painting studies. Other components are not known to be associated with carcinogenic effects.

Mutagenicity
Not considered to be a mutagenic hazard.

Reproductive Toxicity
Not considered to be toxic to reproduction.

Other Information
Prolonged and/or repeated contact with this product can result in defatting of the skin, particularly at elevated temperatures. This can lead to irritation and possibly dermatitis, especially under conditions of poor personal hygiene. Skin contact should be minimised. High pressure injection of product into the skin may lead to local necrosis if the product is not surgically removed. Used oils may contain harmful impurities that have accumulated during use. The concentration of such impurities will depend on use and they may present risks to health and the environment on disposal. ALL used oil should be handled with caution and skin contact avoided as far as possible. It is prudent to assume that prolonged or repeated exposure to used engine oils may cause skin cancer.

12. ECOLOGICAL INFORMATION

Basis for Assessment
Ecotoxicological data have not been determined specifically for this product. Information given is based on a knowledge of the components and the ecotoxicology of similar products.

Mobility
Liquid under most environmental conditions. Floats on water. If it enters soil, it will adsorb to soil particles and will not be mobile.

Persistence / Degradability
Not expected to be readily biodegradable. Major constituents are expected to be inherently biodegradable, but the product contains components that may persist in the environment.

Bioaccumulation
Contains components with the potential to bioaccumulate.

Ecotoxicity
Poorly soluble mixture. May cause physical fouling of aquatic organisms. Product is expected to be practically non-toxic to aquatic organisms, LL/EL50 >100 mg/l. (LL/EL50 expressed as the nominal amount of product required to prepare aqueous test extract). Mineral oil is not expected to cause any chronic effects to aquatic organisms at concentrations less than 1 mg/l.

Other Adverse Effects
Not expected to have ozone depletion potential, photochemical ozone creation potential or global warming potential.
Product is a mixture of non-volatile components, which are not expected to be released to air in any significant quantities.

13. DISPOSAL CONSIDERATIONS

Waste Disposal
Recycle or dispose of in accordance with prevailing regulations, by a recognised collector or contractor. The competence of the contractor to deal satisfactorily with this type of product should be established beforehand. Do not pollute the soil, water or environment with the waste product.

Product Disposal
As for waste disposal.

Container Disposal
Recycle or dispose of in accordance with the legislation in force with a recognised collector or contractor.

14. TRANSPORT INFORMATION

Transport Information
Not dangerous for transport under ADR/RID, IMO and IATA/ICAO regulations.

ADR/RID Class
None Allocated

ADR/RID Packing Group
None Allocated

IMDG Hazard Class
None Allocated

IMDG Packing Group
None Allocated

IATA Hazard Class
None Allocated

IATA Packing Group
None Allocated

15. REGULATORY INFORMATION

EC Symbols	None.
EC Risk Phrase	Not classified.
EC Safety Phrase	Not classified.
EINECS	All components listed or polymer exempt.
TSCA (USA)	All components in compliance.

National Legislation
Environmental Protection Act 1990 (as amended).
Health and Safety at Work Act 1974
Consumers Protection Act 1987
Control of Pollution Act 1974
Environmental Act 1995
Factories Act 1961
Carriage of Dangerous Goods by Road and Rail (Classification, Packaging and Labelling) Regulations
Chemicals (Hazard Information and Packaging for Supply) Regulations 2002.
Control of Substances Hazardous to Health Regulations 1994 (as amended).
Road Traffic (Carriage of Dangerous Substances in Packages) Regulations
Merchant Shipping (Dangerous Goods and Marine Pollutants) Regulations
Road Traffic (Carriage of Dangerous Substances in Road Tankers in Tank Containers) Regulations
Road Traffic (Training of Drivers of Vehicles Carrying Dangerous Goods) Regulations
Reporting of Injuries, Diseases and Dangerous Occurences Regulations
Health and Safety (First Aid) Regulations 1981
Personal Protective Equipment (EC Directive) Regulations 1992
Personal Protective Equipment at Work Regulations 1992

Packaging & Labelling
Safety data sheet available for professional user on request.

16. OTHER INFORMATION

Revisions Highlighted
To assist harmonisation of sds authoring practices, a version number has been introduced.

References
GUIDANCE NOTES
UK Chemicals Regulatory Atlas, An Overview of how to guide your chemical through to regulatory compliance (DTI).
HSG71 The storage of packaged dangerous substances.
EH/40 Occupational Exposure Limits.
EH/58 The Carcinogenicity of Mineral Oils.
MS24 Health surveillance of occupational skin disease.
HSG 53 The selection, use and maintenance of respiratory protective equipment: A practical guide.
HSG 206 Cost and effectiveness of chemical protective gloves for the workplace: Guidance for employers

and health and safety specialists.
L74 First Aid at work: Approved Code of Practice and Guidance.
HSG 136 Workplace transport safety : guidance for employers.
INDG234 (rev) Are you Involved in the Carriage of Dangerous Goods by Road or Rail
OTHER LITERATURE
Concawe Report 3/82 Precautionary Advice on the Handling of Used Engine Oils
Concawe Report 86/69 Health Aspects of Worker Exposure to Oil Mists
Concawe Report 01/97 Petroleum Products - First Aid Emergency and Medical Advice
Concawe Report 01/53 Classification and labelling of petroleum substances according to the EU dangerous substances directive (Concawe recommendations August 2001)
Concawe Report 01/54 environmental classification of petroleum substances summary data and rationale
Concawe Report 5/02 amended safety data sheet directive (2001/58/EC)
Department of the Environment - Waste Management - The Duty of Care - A Code of Practice
Concawe, Boulevard du souverain 165 B - 1160 Brussels, Belgium
www.concawe.be

Restrictions
This product must not be used in applications other than recommended without first seeking the advice of the John Deere technical department.

List of R Phrases in Section 2
R38 Irritating to skin.
R41 Risk of serious damage to eyes.
R51/53 Toxic to aquatic organisms, may cause long-term adverse effects in the aquatic environment.

Further Information
This information is based on our current knowledge and is intended to describe the product for the purposes of health, safety and environmental requirements only. It does not constitute a guarantee for any specific property of the product.

2. Cool Gard

SAFETY DATA SHEET
COOL GARD

1. IDENTIFICATION OF THE SUBSTANCE/PREPARATION AND COMPANY/UNDERTAKING

Product Code 76215
Infosafe No. ACO51 GB/eng/C
Issued Date 07/02/2007
Product Type/Use Antifreeze and coolant.

Supplier
Deere & company
European office
Steubenstrasse 36-42
68163 Mannheim
GERMANY

Telephone Numbers
Emergency Tel.
+1 352 323 3500
Telephone/Fax Number
Tel: +49 621 829 01

2. COMPOSITION/INFORMATION ON INGREDIENTS

Preparation Description
based upon ethylene glycol.

Dangerous Components / Constituents
Exposure limits apply to the following components: Ethylene glycol.

Name	CAS	EINECS	Proportion	Hazard	R Phrase
Ethanediol	107-21-1	203-473-3	40-60 %	Xn	R22

Other Information
See Section 16 'Other Information' for full text of each relevant Risk Phrase.

3. HAZARDS IDENTIFICATION

EC Classification	Harmful.

Human Health Hazards
Harmful if swallowed. Ingestion may cause central nervous system damage, kidney and liver failure and even death. Repeated exposure to high concentrations may cause kidney damage.

Safety Hazards
Not classified as flammable, but will burn.

Environmental Hazards
Not classified as dangerous to the environment.

4. FIRST AID MEASURES

Symptoms and Effects
Ingestion may cause dizziness, headache, nausea, vomiting and, in extreme cases, unconsciousness and even death. Symptoms of poisoning may occur even after several hours, therefore medical observation for at least 48 hours after the accident is required.

Inhalation
In the unlikely event of dizziness or nausea, remove casualty to fresh air. If symptoms persist, obtain medical attention.

Skin
Remove contaminated clothing and wash affected skin with soap and water. If persistent irritation occurs, obtain medical attention.

Eye
Flush eye with copious quantities of water. If persistent irritation occurs, obtain medical attention.

Ingestion
Wash out mouth with water and obtain medical attention. Do not induce vomiting.

Advice to Doctor
Treat symptomatically. Ingestion may cause systemic effects at high dosage. Severe exposure may cause kidney and liver damage. Administer 50ml of pure ethanol in a drinkable concentration.

5. FIRE FIGHTING MEASURES

Specific Hazards
Combustion is likely to give rise to a complex mixture of airborne solid and liquid particulates and gases, including carbon monoxide and unidentified organic and inorganic compounds.

Extinguishing Media
Foam and dry chemical powder. Carbon dioxide, sand or earth may be used for small fires only.

Unsuitable Extinguishing Media
Water in jet. Use of halon extinguishers should be avoided for environmental reasons.

Protective Equipment
Proper protective equipment including breathing apparatus must be worn when approaching a fire in a confined space.

6. ACCIDENTAL RELEASE MEASURES

Personal Precautions
Avoid contact with skin and eyes. Wear PVC, Neoprene or nitrile rubber gloves. Wear rubber knee length safety boots and PVC Jacket and Trousers. Wear safety glasses or full face shield if splashes are likely to occur.

Environmental Precautions
Prevent from spreading or entering into drains, ditches or rivers by using sand, earth, or other appropriate barriers. Inform local authorities if this cannot be prevented.

Clean-up Methods - Small Spillages
Absorb liquid with sand or earth. Sweep up and remove to a suitable, clearly marked container for disposal in accordance with local regulations.

Clean-up Methods - Large Spillages
Prevent from spreading by making a barrier with sand, earth or other containment material. Reclaim liquid directly or in an absorbent. Dispose of as for small spills.

7. HANDLING AND STORAGE

Handling
Use local exhaust ventilation if there is risk of inhalation of vapours, mists or aerosols. Avoid prolonged or repeated contact with skin. When handling product in drums, safety footwear should be worn and proper handling equipment should be used. Prevent spillages. Cloth, paper and other materials that are used to absorb spills present a fire hazard. Avoid their accumulation by disposing of them safely and immediately. In addition to any specific recommendations given for controls of risks to health, safety and the environment, an assessment of risks must be made to help determine controls appropriate to local circumstances.

Storage
Keep in a cool, dry, well-ventilated place. Use properly labelled and closeable containers. Avoid direct sunlight, heat sources, and strong oxidizing agents.

Storage Temperatures
0ºC Minimum. 50ºC Maximum.

Recommended Materials
For containers or container linings, use mild steel or high density polyethylene.

Unsuitable Materials
Zinc alloys. Avoid contact with galvanized materials.

Other Information
Polyethylene containers should not be exposed to high temperatures because of possible risk of distortion.

8. EXPOSURE CONTROLS, PERSONAL PROTECTION

Exposure Limits

Substance	Regulations	Exposure Duration	Exposure Limit	Units	Notes
Ethane-1,2-diol, vapour	EH 40 2005	TWA	20	ppm	Sk
	EH 40 2005	TWA	52	mg/m3	Sk
	EH 40 2005	STEL	40	ppm	
	EH 40 2005	STEL	104	mg/m3	
Ethanediol	EH 40 2005	TWA	20	ppm	Sk
	EH 40 2005	TWA	52	mg/m3	Sk
	EH 40 2005	STEL	40	ppm	
	EH 40 2005	STEL	104	mg/m3	

EH 40 2005 EH 40 2005 Health and Safety Executive. EH40; Workplace Exposure Limits

Exposure Controls
The use of personal protective equipment is only one aspect of an integrated approach to the Control Of Substances Hazardous to Health.
The management of Health and Safety at Work Regulations 1992 require employers to identify and evaluate the risks to health and to implement appropriate measures to eliminate or minimise those risks. The choice of personal protective equipment is highly dependent upon local conditions, e.g. exposure to other chemical substances and micro-organisms, thermal hazards (protection from extremes of cold and heat), electrical hazards, mechanical hazards and appropriate degree of manual dexterity required to undertake an activity.
Whilst the content of this section may inform the choice of personal protective equipment used, the limitations of any information which can be provided must be fully understood, e.g. personal protective equipment chosen to protect employees from occasional splashes maybe entirely inadequate for activities involving partial or complete immersion.If the levels of oil mist or vapour in air are likely to exceed the occupational exposure standards then consideration should be given to the use of local exhaust ventilation to reduce personal exposure.
The choice of personal protective equipment should only be undertaken in the light of a full risk assessment by a suitably qualified competent person (e.g. a professionally qualified occupational hygienist).
Effective protection is only achieved by correctly fitting and well maintained equipment and employers should ensure that appropriate training is given. All personal protective equipment should be regularly inspected and replaced if defective.

Respiratory Protection
Care should be taken to keep exposures below applicable occupational exposure limits. If this cannot be achieved, use of a respirator fitted with an organic vapour cartridge combined with a particulate pre-filter should be considered.

Hand Protection
Chemical protective gloves are made from a wide range of materials, but there is no single glove material (or combination of materials) which gives unlimited resistance to any individual or combination of substances or preparations. The extent of the breakthrough time will be affected by a combination of factors which include

permeation, penetration, degradation, use pattern (full immersion, occasional contacts) and how the glove is stored when not in use.
Theoretical maximum levels of protection are seldom achieved in practice and the actual level of protection can be difficult to assess. Effective breakthrough time should be used with care and a margin of safety should be applied. HSE guidance on protective gloves recommends a 75% safety factor to be applied to any figures obtained in a laboratory test. Nitrile gloves may offer relatively long breakthrough times and slow permeation rates. Test data, e.g breakthrough data obtained through test standard EN374-3:1994 are available from reputable equipment suppliers.
Personal hygiene is a key element of effective hand care. Gloves must only be worn on clean hands. After using gloves, hands should be washed and dried thoroughly. A non perfumed moisturiser should be applied.

Eye Protection
Goggles conforming to a minimum standard of EN 166 345B should be considered if there is a possibility of eye contact with the product through splashing. Higher rated eye protection must be considered for highly hazardous operations or work areas. For example, employees involved in metalworking operations such as chipping, grinding or cutting may require additional protection to avert injury from fast moving particles or broken tools.

Body Protection
Minimise all forms of skin contact. Launder overalls and undergarments regularly.

Environmental Exposure Controls
Minimise release to the environment. An environmental assessment must be made to ensure compliance with local environmental legislation.

9. PHYSICAL AND CHEMICAL PROPERTIES

Colour	Colour according to specification.
Physical State	Liquid at ambient temperature.
Odour	Characteristic.
pH Value	8.2.
Vapour Pressure	0.05 mmHg at 20ºC.
Boiling Point	110ºC.
Solubility in Water	Completely miscible.
Density	1073 kg/m3 at 15ºC.
Flash Point	>110ºC.
Vapour Density (Air=1)	>2.
Other Information	Freezing Point: -36 °C.

10. STABILITY AND REACTIVITY

Stability
Stable.

Conditions to Avoid
Extremes of temperature and direct sunlight.

Materials to Avoid
Strong oxidizing agents.

Hazardous Decomposition Products
Hazardous decomposition products are not expected to form during normal storage.

11. TOXICOLOGICAL INFORMATION

Basis for Assessment
Toxicological data have not been determined specifically for this product. Information given is based on a knowledge of the components and the toxicology of similar products.

Acute Toxicity - Oral
LD50 expected to be > 2000 mg/kg. Classified as harmful by EC criteria. Note: There is a marked difference in acute oral toxicity between animals and man, man being more susceptible than animals. The estimated

fatal dose for man is 100 millilitres.

Acute Toxicity - Dermal
LD50 expected to be > 2000 mg/kg.

Acute Toxicity - Inhalation
Not considered to be an inhalation hazard under normal conditions of use.

Eye Irritation
Expected to be slightly irritating.

Skin Irritation
Expected to be slightly irritating.

Respiratory Irritation
If mists are inhaled, slight irritation of the respiratory tract may occur.

Skin Sensitisation
Not expected to be a skin sensitizer.

Carcinogenicity
Components are not known to be associated with carcinogenic effects.

Mutagenicity
Not considered to be a mutagenic hazard.

Reproductive Toxicity
Not considered to be toxic to reproduction.

12. ECOLOGICAL INFORMATION

Basis for Assessment
Ecotoxicological data have not been determined specifically for this product. Information given is based on a knowledge of the components and the ecotoxicology of similar products.

Mobility
Liquid under most environmental conditions. Dissolves in water.

Persistence / Degradability
Major components are readily biodegradable.

Bioaccumulation
Not expected to bioaccumulate significantly.

Ecotoxicity
Product is expected to be practically non-toxic to aquatic organisms, LL/EL50 >100 mg/l. (LL/EL50 expressed as the nominal amount of product required to prepare aqueous test extract).

Other Adverse Effects
Not expected to have ozone depletion potential, photochemical ozone creation potential or global warming potential. Product is a mixture of non-volatile components, which are not expected to be released to air in any significant quantities.

13. DISPOSAL CONSIDERATIONS

Waste Disposal
Recycle or dispose of in accordance with prevailing regulations, by a recognised collector or contractor. The competence of the contractor to deal satisfactorily with this type of product should be established beforehand. Do not pollute the soil, water or environment with the waste product.

Product Disposal
As for waste disposal.

Container Disposal
Recycle or dispose of in accordance with the legislation in force with a recognised collector or contractor.

Local Legislation
Hazardous Waste (England and Wales) Regulations 2005.

14. TRANSPORT INFORMATION

Transport Information
Not dangerous for transport under ADR/RID, IMO and IATA/ICAO regulations.

ADR/RID Class
None Allocated

ADR/RID Packing Group
None Allocated

IMDG Hazard Class
None Allocated

IMDG Packing Group
None Allocated

IATA Hazard Class
None Allocated

IATA Packing Group
None Allocated

15. REGULATORY INFORMATION

EC Symbols	Xn

Indication of danger
Harmful.

EC Risk Phrase	R22 Harmful if swallowed.
EC Safety Phrase	S2 Keep out of reach of children. S24/25 Avoid contact with skin and eyes. S46 If swallowed, seek medical advice immediately and show this container or label.
EINECS	All components listed or polymer exempt.

National Legislation
Environmental Protection Act 1990 (as amended).
Health and Safety at Work Act 1974
Consumers Protection Act 1987
Control of Pollution Act 1974
Environmental Act 1995
Factories Act 1961
Carriage of Dangerous Goods by Road and Rail (Classification, Packaging and Labelling) Regulations
Chemicals (Hazard Information and Packaging for Supply) Regulations 2002.
Control of Substances Hazardous to Health Regulations 1994 (as amended).
Road Traffic (Carriage of Dangerous Substances in Packages) Regulations
Merchant Shipping (Dangerous Goods and Marine Pollutants) Regulations
Road Traffic (Carriage of Dangerous Substances in Road Tankers in Tank Containers) Regulations
Road Traffic (Training of Drivers of Vehicles Carrying Dangerous Goods) Regulations
Reporting of Injuries, Diseases and Dangerous Occurences Regulations

Health and Safety (First Aid) Regulations 1981
Personal Protective Equipment (EC Directive) Regulations 1992
Personal Protective Equipment at Work Regulations 1992

Packaging & Labelling
Contains ethanediol. Contains bittering agent.

16. OTHER INFORMATION

Revisions Highlighted
To assist harmonisation of sds authoring practices, a version number has been introduced.
15. REGULATORY INFORMATION - Packaging & Labelling

References
67/548/EEC - Dangerous Substances Directive.
1999/45/EC - Dangerous Preparations Directive.
91/155/EEC - Safety Data Sheet Directive. 98/24/EC - Protection of the Health and Safety of Workers from risks related to chemical agents at work.
89/686/EEC - Approximation of the laws of the Member States relating to personal protective equipment.
76/769/EEC - Restrictions of the marketing and use.
Relevant Comité Européen de Normalisation (CEN) standards giving specific requirements for personal protective equipment.
Regulation of the European Parliament and of the Council on Detergents. EN 374-2:1994 Protective gloves against chemicals and micro-organisms
EN 149:2001 Respiratory protective devices - filtering half masks to protect against particles - requirements, testing, marking
EN 405:1992 Respiratory protective devices - valved filtering half masks to protect against gases or gases and particles - requirements, testing, marking.
EN 141:2000 Respiratory protective devices - gas filters and combined filters - requirements, testing, marking
EN 143:2000 Respiratory protective devices - particle filters - requirements, testing, marking
EN 166:1995 Personal eye-protection - specification.

Restrictions
This product must not be used in applications other than recommended without first seeking the advice of the John Deere technical department.

List of R Phrases in Section 2
R22 Harmful if swallowed.

Further Information
This information is based on our current knowledge and is intended to describe the product for the purposes of health, safety and environmental requirements only. It does not constitute a guarantee for any specific property of the product.

SERVICE RECORD CARD

Model: .....

Engine No: .....

Carried out by E.P.Barrus **Print Name:** PDI **Actual Hours:** **Signed:**	**Boat Builder Stamp:** **Commission of Boat and Hand Over to Customer. (Refer to the Installation Check List Page in this Manual).** **Date:** **Signed:**
Dealer Stamp: 1st **Actual Hours:** **Signed:**	**Dealer Stamp:** 2nd **Actual Hours:** **Signed:**
Dealer Stamp: 3rd **Actual Hours:** **Signed:**	**Dealer Stamp:** 4th **Actual Hours:** **Signed:**
Dealer Stamp: 5th **Actual Hours:** **Signed:**	**Dealer Stamp:** 6th **Actual Hours:** **Signed:**

Please refer to Owner's Manual for service intervals