ORIGINAL INSTRUCTION

SEA WATER COOLED BOAT ENGINE MANUAL

For the following engine models:

T-10

T-15

T-20

SAFETY

Thornycroft is concerned for your safety. We use safety statements throughout the manual to call your attention to the potential hazards associated with the operation of your Thornycroft engine.

Follow the precautions listed throughout the manual before operation, during operation and during servicing/maintenance procedures for your safety, the safety of others and to protect the performance of your engine.

Safety alert symbol appears throughout the manual. It means attention, be alert as your safety is involved. Please read and follow the message that appears after the safety alert symbol.

	NOTICE:	This indicates a situation which can cause damage to the machine, personal property and/or the environment or cause the equipment to operate improperly
	CAUTION:	This indicates a hazardous situation which, if not avoided, could result in minor or moderate injury.
	WARNING:	This indicates a hazardous situation which, if not avoided, could result in death or serious injury.
	DANGER:	This indicates a hazardous situation which, if not avoided, will result in death or serious injury.

Engine Details

Engine Serial Number:	

Please enter your engine serial number in the space provided above. Please quote the engine identification number during any enquiry or when ordering spare parts. Information about the engine serial number and its location on the engine can be found in **SECTION 2** of the manual.

NOTICE:

THIS MANUAL FORMS AN INTEGRAL PART OF THE ENGINE IT ACCOMPANIES, IF A TRANSFER OF TITLE OCCURS, IT MUST ALWAYS BE HANDED OVER TO THE NEW OWNER.

Thank you for purchasing this Sea Water Cooled Boat Marine Engine from Thornycroft. This manual has been compiled to help you to operate your engine and its associated parts with safety and pleasure. Please read it carefully in conjunction with the PRM Gearbox Manual and familiarise yourself with the engine and its parts before operation. The PRM Gearbox Manual is available from the PRM website:

www.prm-newage.com

The information and recommendations given in this manual are based on the latest information available at the time of publication. Thornycroft reserve the right to change the specification of its products and manuals without prior notice.

Depending upon the equipment specification of the engine and accessories fitted, there may be discrepancies with the information presented in this handbook. No claims may be pursued in this respect.

WARRANTY

This UK Limited Warranty provides coverage for One (1) year for recreational users and One (1) year (or 1000 hours whichever occurs first) for commercial users from the date of warranty registration. The warranty is for non-serviceable items. The repair or replacement of parts, or the performance of service under this warranty, does not extend the life of this warranty beyond its original expiry date.

To ensure that you have been registered for your warranty, please ask your Boat-Builder or Engine supplier to provide your portion of the registration form.

The Warranty will only apply if the following have been carried out:

1/ The Installation Check List in the Installation Section has been fully completed.
2/ The boat builder or engine installer has completed the Boat Builder Section on the Service Record Card (located at the back of this manual) regarding hand over and commissioning of boat.
3/ The registration form has been completed and returned to Thornycroft.

PRM Gearboxes are covered by a one (1) year warranty.

Engine alternator, starter motor and electrical components are only covered by a one (1) year warranty.

CONDITIONS THAT MUST BE MET IN ORDER TO OBTAIN WARRANTY COVERAGE

Warranty coverage is only available from an authorised dealer in the country in which the sale occurred. Routine maintenance outlined in the Owner's Manual must be performed using genuine parts in order to maintain warranty coverage. If the customer performs maintenance, Thornycroft reserves the right to make future warranty coverage possible only with proof of proper maintenance.

WARRANTY CLAIMS

Warranty claims shall be made by an authorised dealer or boat builder.

The dealer or boat builder will then arrange for the inspection and any necessary repairs. If the repairs carried out are not covered by the warranty, the purchaser shall pay for all related labour and material, and any other expenses associated with that service.

WHAT IS NOT COVERED

This limited warranty does not cover routine maintenance items, adjustments, normal wear and tear, damage caused by abnormal use, operation of the product in a manner inconsistent with the recommended operation/duty cycle section of the Owner's Manual, accident, submersion, improper installation (proper installation specification and techniques are set forth in the Operations and First time running sections in this manual), use of an accessory or part not manufactured or sold by us, or alteration or removal of parts. Expenses related to crane-out, launch, towing, storage, telephone, rental, inconvenience, slip fees, insurance coverage, loan payments, loss of time, loss of income, or any other types of accidental or consequential damages are not covered by this warranty.

Engine electrical systems fitted with alternator boost charge systems or any other electrical management systems are not covered by warranty.

Engine and fuel equipment is not covered by warranty if bio-diesel is used in the fuel system. Also if no type of water trap is incorporated into the fuel system.

Index

Page

SECTION 1 – Safety Precautions 10

1. General 10
2. Lifting 10
3. Rotating Shafts and Belts 10
4. Exhaust System 11
5. Launching and Lifting Boats 11
6. Batteries 11

SECTION 2 – Engine Identification 13

SECTION 3 – Component Identification 14

1. T10 / T15 / T20 14

SECTION 4 – Control Panel 15

1. Basic Control Panel 15
2. Standard Control Panel 15
3. Deluxe Control Panel 16
4. Control Panel Overview 16
5. Warning Light Procedure 16
6. Overall Dimensions of the Basic Control Panel 19
7. Overall Dimensions of the Standard Control Panel 19
8. Overall Dimensions of the Deluxe Control Panel 20

SECTION 5 – Installation 21

1. Ventilation 21
2. Engine Beds 21
3. Engine Cooling Connections 21
4. Shaft Connection and Propeller Selection 21
5. Engine Anti-Vibration Mounts 21
6. Engine Alignment 25
7. Engine Inclination 25
8. Electrics 26

9. Electrical Options 26
10. Engine Oil 26
11. Fuel 27
12. Coolant 28
13. Control Cables 29
14. Domestic Battery Bank 29
15. Control Panel 30
16. Exhaust System (Sea Water Cooled Boat) 31
17. Hydraulic Drive Transmissions 33
18. Installation Check List 35
SECTION 6 – Operation 36
1. Starting the engine for the first time 36
2. Starting Procedure 36
3. Stopping Procedure 37
4. Full Load Running 37
5. Refuelling 37
6. Diesel Fuel Additive 38
7. Exhaust Back Pressure 38
8. Single Shift Control Lever Side Mount Operation - Optional (RDG9210055) 38
SECTION 7 – Service Procedure 39
1. Engine Oil and Filter Change 39
2. Air Filter Check and Change 40
3. Gearbox Oil Change 40
4. Disposal of Oil and Related Items 41
5. Fuel Filter Drain – 10 /15 / 20 42
6. Fuel Filter Change 43
7. Fuel System Bleeding 44
8. Cooling System 44
9. Belt Adjustment 45
10. Belt Maintenance 46

11. Belt Replacement 46
12. Control Panel Maintenance....47
13. Sacrificial Anode Change....47
14. Raw Water Pump Impellor Change (Work Boat & River Boat) 48
15. Engine Heat Exchanger Tube Stack Flushing 48
16. Winterization of Seawater Cooling System (Work Boat & River Boat)....48
SECTION 8 – Service Schedule 50
1. Specifications and Capacities 50
2. Service Intervals 51
SECTION 9 – Wiring Diagrams 52
1. Engine Wiring Diagram Thornycroft T-10 / T-15 / T-20....52
2. Basic Control Panel Wiring Diagram....53
3. Standard Control Panel Wiring Diagram 54
4. Deluxe Control Panel Wiring Diagram (Additional Option – SS1551) 55
SECTION 10 – Technical Data 56
1. Engine Data 56
2. Return Diesel System 57
3. Dry Weight of Engine Data 57
SECTION 11 – Service Parts 58
SECTION 13 – Declarations 60
1. Declaration of Conformity for Recreational Craft Propulsion Engines to the Directive No 2013/53/EU 60
2. Declaration of Incorporation of Partly Completed Machinery 61
SECTION 14 – Lubricant Safety Data Sheets 65
1. Ground Force 10W-40 65
2. Liquimatic Super ATF 74
SECTION 15 – Thornycroft Service Record Card 83

SECTION 1 – Safety Precautions

1. General

NOTICE:

NEVER PERMIT ANYONE TO OPERATE THE ENGINE WITHOUT PROPER TRAINING.

It is the responsibility of the installer/operator to ensure that the finished installation complies with CE Marking, the relevant Health & Safety requirements and the recreational craft directive before commissioning.

Ensure that the engine battery isolator switch is in the off position and the key removed from the control panel before carrying out any maintenance or repairs.

2. Lifting

DANGER:

CRUSH HAZARD! NEVER STAND UNDER A HOISTED ENGINE. IF THE HOIST MECHANISM FAILS, THE ENGINE WILL FALL ON YOU, CAUSING SERIOUS INJURY OR DEATH.

The Lifting points supplied with the engine are for lifting the engine/gearbox only. A suitable spreader bar must be employed to prevent over-stressing either bracket during any lift.

3. Rotating Shafts and Belts

WARNING:

SEVERE HAZARD! KEEP HANDS AND OTHER BODY PARTS AWAY FROM MOVING/ROTATING PARTS. WEAR TIGHT FITTING CLOTHING AND KEEP YOUR HAIR SHORT OR TIE BACK. REMOVE ALL JEWELLERY BEFORE COMMENCING WORK. CHECK BEFORE STARTING THE ENGINE THAT ANY TOOLS OR RAGS USED DURING MAINTENANCE HAVE BEEN REMOVED FROM THE AREA.

The engine and its accessories are not intended to be put into operation until they are integrated into the boat as a whole. No person should be in the engine compartment and the engine cover or deck hatches should be closed whilst the engine is running.

4. Exhaust System

WARNING:

EXHAUST HAZARD! NEVER OPERATE ENGINE IN A BOATS ENGINE BAY WITHOUT PROPER VENTILATION. NEVER BLOCK VENTS OR OTHER MEANS OF VENTILATION. ALL COMBUSTION ENGINES CREATE CARBON MONOXIDE GAS DURING OPERATION. ACCUMULATION OF THIS GAS COULD CAUSE ILLNESS OR EVEN DEATH.

WARNING:

BURN HAZARD! WAIT UNTIL THE EXHAUST COOLS BEFORE YOU TOUCH IT.

Exhaust gases may have temperatures as high as 650°C and contain elements which are harmful if ingested.
It is therefore essential that exhaust systems are gas tight and lagged to prevent accidental burning and inhalation of exhaust gases when inside the boat cabin.

5. Launching and Lifting Boats

Care must be taken when launching or craning new boats into or out of the waterway, so that water does not enter the engine via the exhaust system or air vents. It is recommended that these are blocked temporarily whilst undertaking this procedure.

6. Batteries

DANGER:

EXPLOSION HAZARD! NEVER SHORT OUT THE BATTERY TERMINALS, INCLUDING WHEN CHECKING THE REMAINING BATTERY CHARGE THIS WILL RESULT IN A SPARK AND MAY CAUSE AN EXPLOSION OR FIRE.

WARNING:

BURN HAZARD! BATTERIES CONTAIN SULPHURIC ACID. NEVER ALLOW BATTERY FLUID TO COME IN CONTACT WITH SKIN, EYES OR CLOTHING. SEVERE BURNS COULD RESULT. MAKE SURE THE CORRECT PERSONAL PROTECTION EQUIPMENT IS WORN.

- Batteries can produce explosive gases; keep sparks and flames away from the battery.

NO SMOKING

- Batteries contain sulphuric acid; if splashed on skin or eyes, flush well with water and seek medical advice.
- Keep battery tops and battery compartment ventilated at all times
- If disconnecting the battery; remove the earth lead **FIRST**; and re-connect it last.
- If charging the battery; ensure that the charger is switched off before connecting and disconnecting.
- Do not tip the battery on its side.
- Please see label on battery or manufacturer's instructions for specific information.

SECTION 2 – Engine Identification

The engine serial number can be found engraved into the brass plate on the top of the engine rocker cover and stamped to the crankcase next to the starter motor.

An example of the engine identification plate is shown below (**Figure 1**):

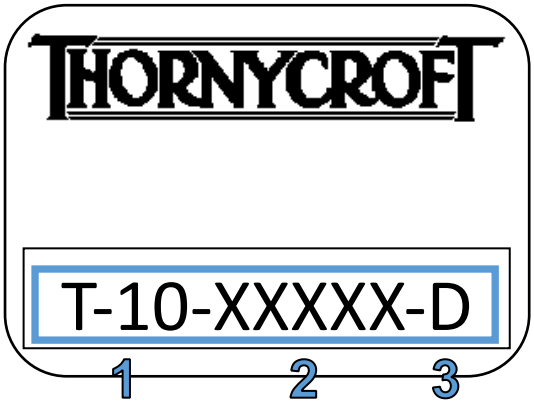

	Description
1	Engine Model
2	Serial Number
3	Indicates Model Type or Optional Extras: D = Deluxe Panel

Figure 1: Engine Identification Badge

Description of Models:
T10 / T15 / T-20: Seawater / Integral exhaust manifold, heat exchanger cooled. Water injected exhaust system.

***Note**: There are a number of optional extras that may be fitted to an engine that are not listed here.

A list of common item service part numbers can be found in **Section 12**, Thornycroft Parts.

SECTION 3 – Component Identification

1. T10 / T15 / T20

	Description*
1	Seawater Pump
2	50 Amp 12 Volt Alternator
3	Oil Filter
4	Water Cooled Exhaust

Figure 2: T10 / T15 / T20 Left Side (Viewed from front)

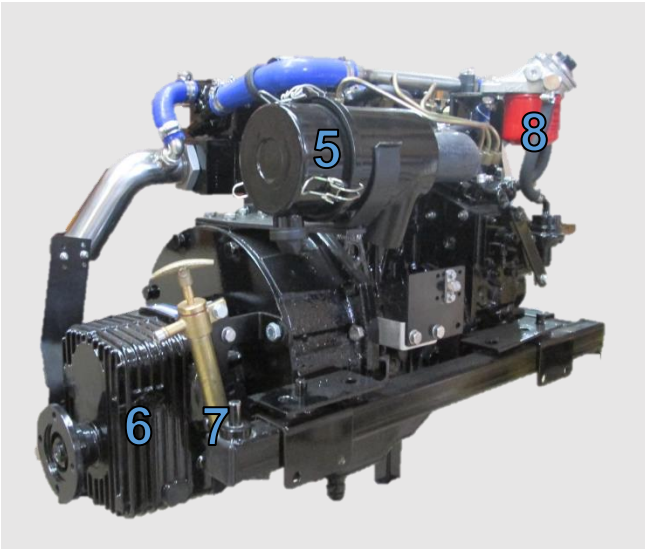

	Description*
5	Air Filter
6	Gearbox
7	Engine Sump Pump
8	Engine Fuel Filter

Figure 3: T10 / T15 / T20 Right Side (Viewed from rear)

***Note**: There are a number of optional extras that may be fitted to an engine that are not shown here.

SECTION 4 – Control Panel

1. Basic Control Panel

Figure 4: Basic Control Panel

	Description
3	Water Temperature Warning Light
4	Oil Pressure Warning Light
5	50A Alternator Charge Warning Light
7	Glow Plug Light
8	Key Flap and Ignition Switch
12	Engine Stop

2. Standard Control Panel

Figure 5: Standard Control Panel

	Description
1	Tachometer Gauge
2	Hour Meter
3	Water Temperature Warning Light
4	Oil Pressure Warning Light
5	50A Alternator Charge Warning Light
6	70A Alternator Charge Warning Light
7	Glow Plug Light
8	Key Flap and Ignition Switch
12	Engine Stop

3. Deluxe Control Panel

Figure 6: Deluxe Control Panel

	Description
1	Tachometer Gauge
2	Hour Meter
3	Water Temperature Warning Light
4	Oil Pressure Warning Light
5	50A Alternator Charge Warning Light
6	70A Alternator Charge Warning Light
7	Glow Plug Light
8	Key Flap and Ignition Switch
9	50A Alternator Output Gauge
10	Oil Pressure Gauge
11	Water Temperature Gauge
12	Engine Stop

4. Control Panel Overview

- All Thornycroft engines are supplied with a control panel.
- Depending on the model of Thornycroft engine, the control panel will either be a standard control panel or a deluxe control panel. The following table shows which panel comes with each type of engine as standard. Please note that on certain Thornycroft engines a different type of control panel can be ordered as an option.

Engine	Control Panel Supplied*
T10	Basic Control Panel
T15 / T20	Standard Control Panel

* Panel supplied as standard. On certain engines a different control panel may be supplied as an option

5. Warning Light Procedure

- When the ignition is first turned on, the control panel warning lights will come on as a bulb check. When the engine is started the warning lights will go out. Please note that the water temperature warning light and glow plug light operate slightly differently.

- The water temperature warning light will only come on for a brief period of time when the ignition is first turned on as a bulb check. It will then only illuminate in the case of the engine coolant temperature exceeding the maximum safety level.

- The glow plug light will come on when the ignition is first turned on for 5 – 8 seconds to indicate the heating system is operational. When the light goes out the engine can be started.

- Whilst the control panel is in operation all the gauges are backlit. This does not indicate a fault and is a normal function for the control panel.

- If any of the warning lights on the control panel come on **whilst** the engine is running, please follow the correct procedure as shown in the following table.

In the event of a fault, only trained and qualified personnel should undertake repairs on the engine

	Description	Procedure for Warning Light
1	Tachometer Gauge	-
2	Hour Meter	-
3	Water Temperature Warning Light	Reduce the engine revs and stop the engine within one or two minutes. Check the coolant level (refer to **8. Cooling System of SECTION 7 - SERVICE PROCEDURE**). If the coolant level is incorrect, fill it to the correct level (refer to **8. Cooling System of SECTION 7 - SERVICE PROCEDURE**) and restart the engine. If the coolant level is correct and the fault is still present, or there is a coolant leak, please contact your local dealer.
4	Oil Pressure Warning Light	Stop the engine immediately. Contact your local dealer. Failure to stop the engine may result in permanent engine damage.
5	50A Alternator Charge Warning Light	This indicates that the alternator has stopped charging. The engine can still be operated for a short period of time. Contact your local dealer.
6	70A Alternator Charge Warning Light*	This indicates that the alternator has stopped charging. The engine can still be operated for a short period of time. Contact your local dealer.
7	Glow Plug Light	This indicates that the cold start system is operating. If the light fails to illuminate during the starting procedure contact your local dealer.
8	Key Flap and Ignition Switch	-
9	50A Alternator Output Gauge	-
10	Oil Pressure Gauge	-
11	Water Temperature Gauge	-

*Only applicable if fitted to the engine

6. Overall Dimensions of the Basic Control Panel

(All Dimensions are in mm)

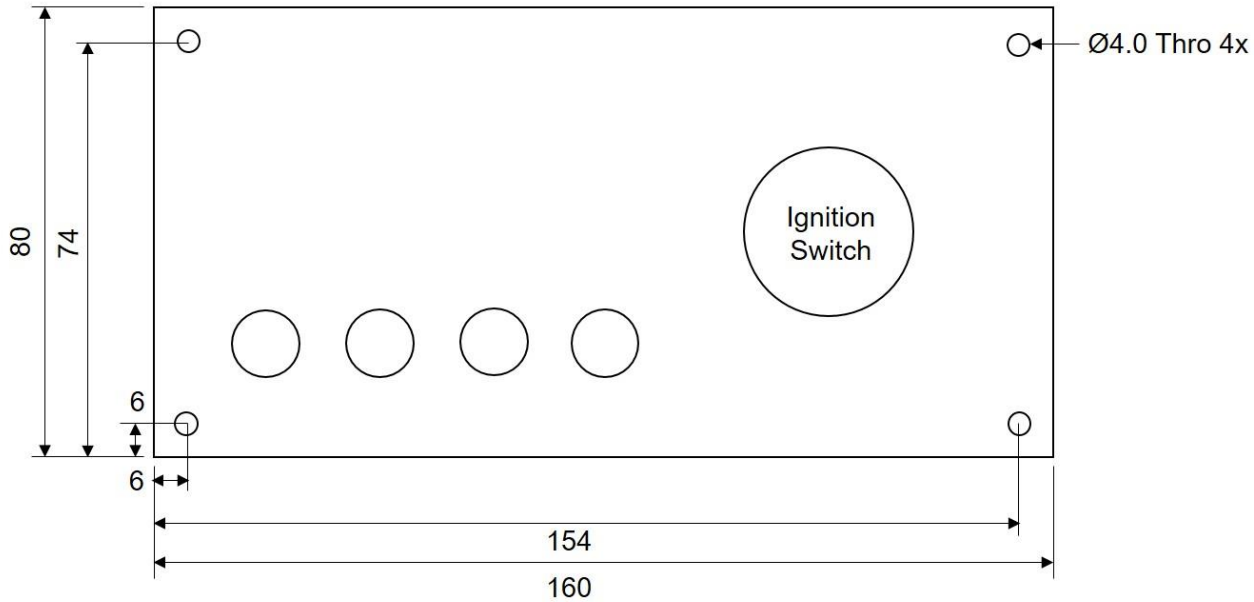

Figure 7: Basic Control Panel Dimensions

7. Overall Dimensions of the Standard Control Panel

(All Dimensions are in mm)

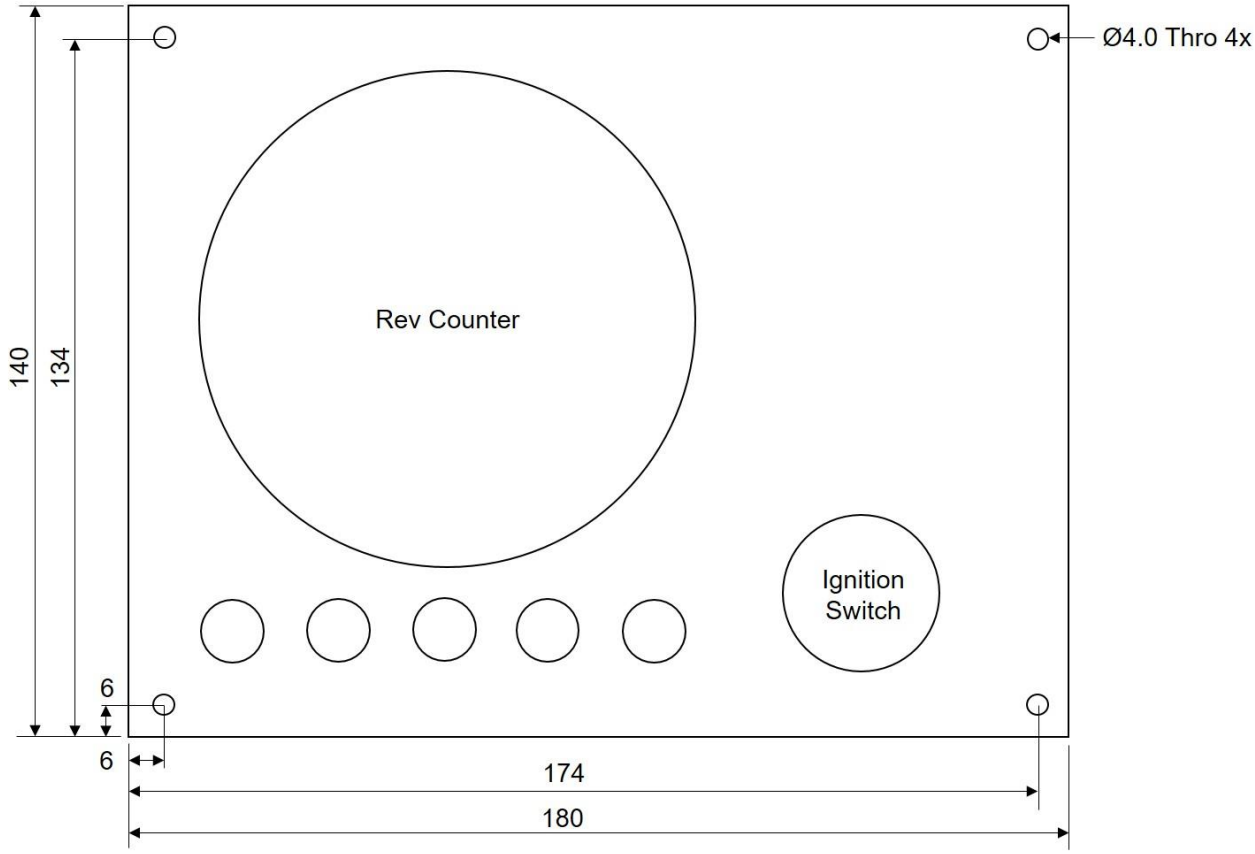

Figure 8: Standard Control Panel Dimensions

8. Overall Dimensions of the Deluxe Control Panel

(All Dimensions are in mm)

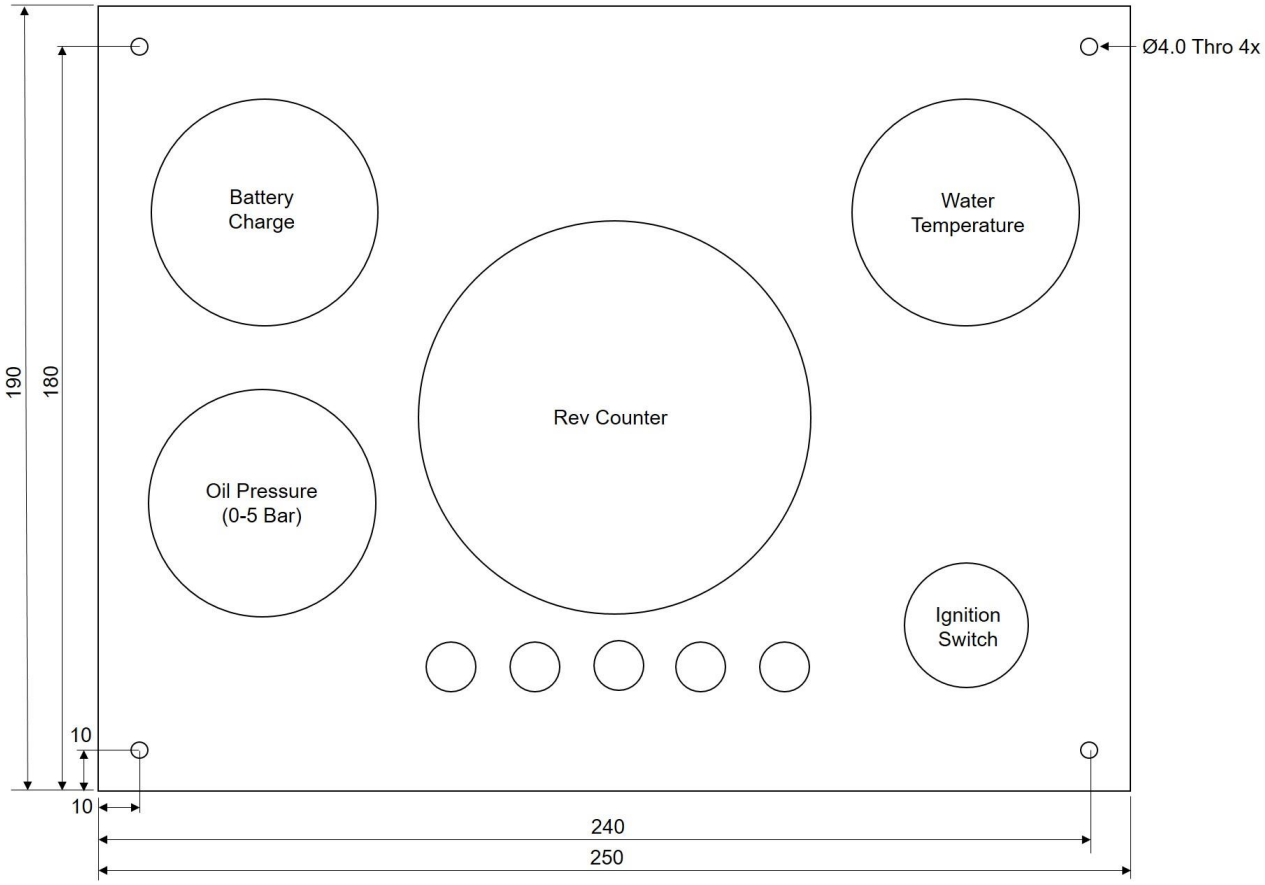

Figure 9: Deluxe Control Panel Dimensions

SECTION 5 – Installation

NOTICE:

REFER TO THE THORNYCROFT MANUAL PRIOR TO INSTALLING THE ENGINE.

1. **Ventilation**

- All internal combustion engines radiate heat and require cool, clean air to aid complete combustion.
- Please Ensure that adequate engine room ventilation is provided, by fitting at least two vents of an aperture of not less than 10,000mm2 each (16in^2).

An allowance must be made for any grills, louvres or bends placed in the airflows and generally an increase of 25% in area is sufficient to overcome any restriction problems.

2. **Engine Beds**

- These should be a minimum of 10mm thick, extended rearward and be welded to the hull and forward to the bulkhead. Webs or gussets must be welded in place midway to prevent flexing.

3. **Engine Cooling Connections**

- Seawater inlet hose size: 19mm (¾”)
- Water cooled exhaust hose size: 50mm (2”)

4. **Shaft Connection and Propeller Selection**

- Some type of flexible coupling must be used to connect the gearbox output flange to the propeller shaft flange.
- Please note, underperforming engines will not be covered under warranty if the cause of the poor performance is found to be the use of an inappropriate propeller.

5. **Engine Anti-Vibration Mounts**

- Ensure that the engine feet do not end up at the top of the thread on the engine mounts, this puts undue pressure on them and can result in excessive engine movement and premature mount failure. If this is a problem put steel packing plates under the mounts.

- Ensure that the engine has been installed for at least 24 hours before shaft alignment is checked, to allow the mounts time to settle under the engine weight.
- Ensure that the anti-vibration mount centre screw is sufficiently raised so as not to touch the engine bed. If this occurs, excessive engine vibration will be experienced through the hull.
- Alternative mounting holes for the anti-vibration mounts are available. Your new engine maybe replacing an old engine so suitable holes may align with your existing mounting holes
- For the best results, the mounting screw for the front mount should go into the most forward hole in the bracket. The mounting screw for the rear mount should go into the most rearward hole in the bracket.

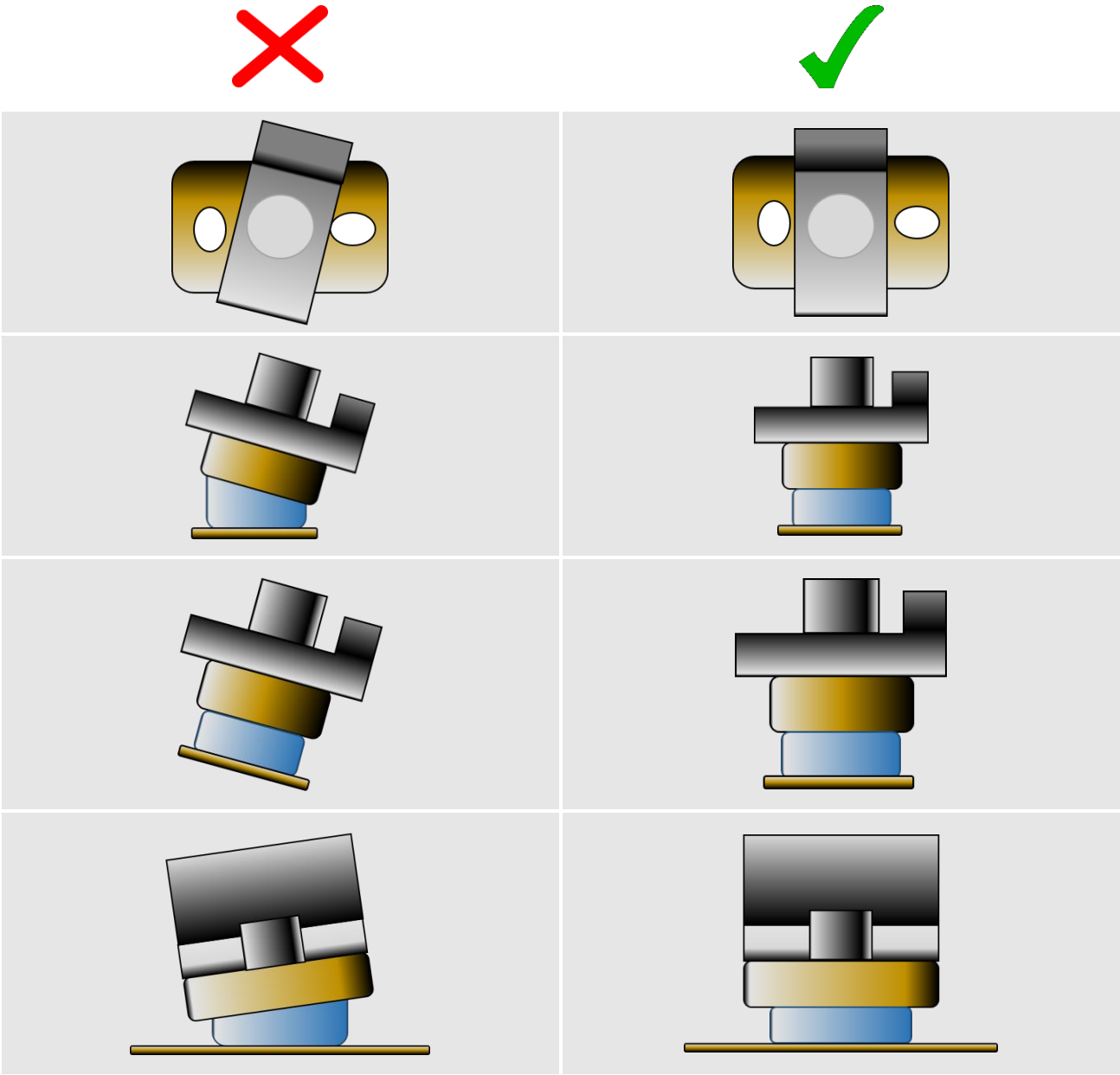

Figure 10: Correct Anti-Vibration Mount Installation

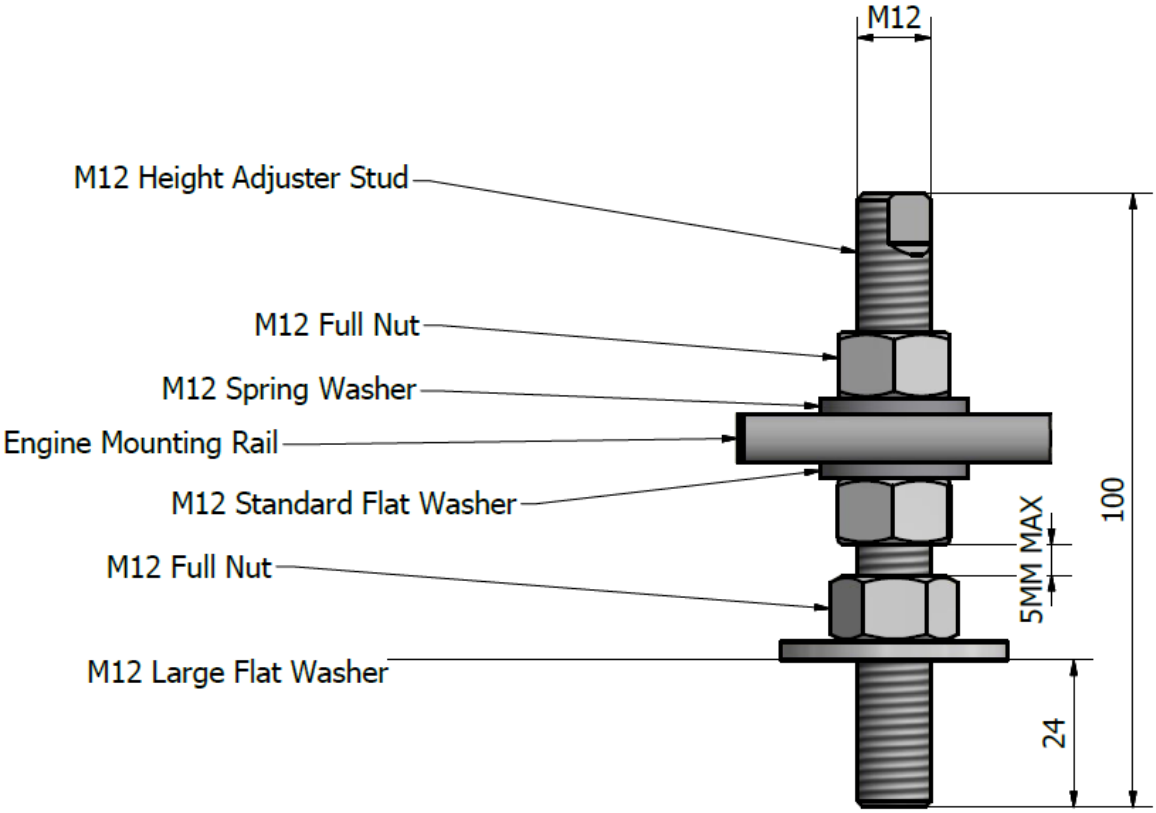

Figure 11: Correct Anti-Vibration Mount Installation

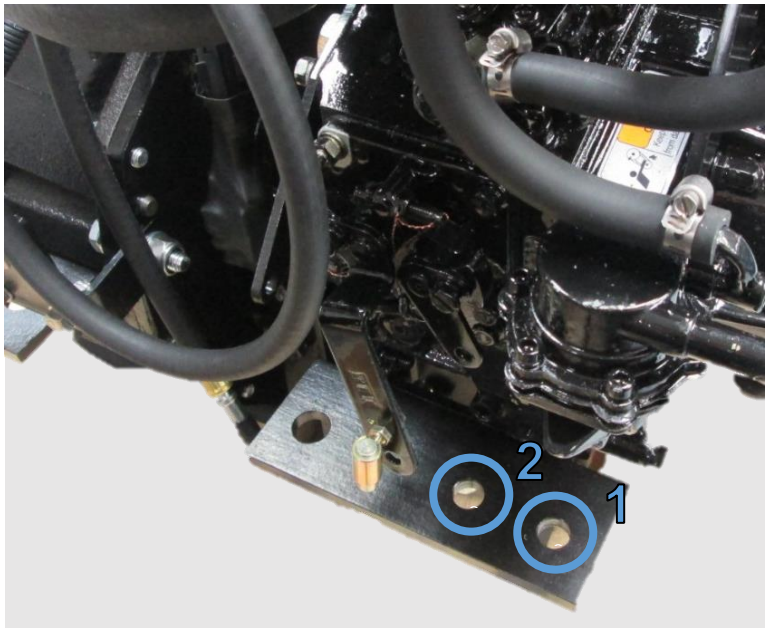

	Description
1	Normal mounting position
2	Alternative mounting position if engine compartment space is restricted

Figure 12: Anti-Vibration Mount Installation Points

6. Engine Alignment

- The gearbox output shaft flange and propeller shaft input flange must be almost perfectly aligned. A maximum of 0.05mm (0.002”) misalignment in any plane is acceptable. Ensure alignment is rechecked after the first 4 hours of running, after the first month and thereafter annually.
- If the engine is out of alignment it will result in excessive vibration and possible damage to the stern tube and propeller shaft.
- Boats that are fitted with fully flexible drive couplings should still have the engine and shaft alignment as close as possible. A dummy shaft may be required for this purpose.

Some types of flexible shaft couplings require the input and output to be misaligned, check with the coupling manufacturer’s installation instructions.

- Minimum clearance of 25mm between rails and engine beds.

7. Engine Inclination

- The engine installation angle is the angle of the crankshaft centre to the water line (***Figure* 13**).
- The propulsion efficiency decreases as the engine installation angle increases.
- The **maximum** engine installation angle is 15°

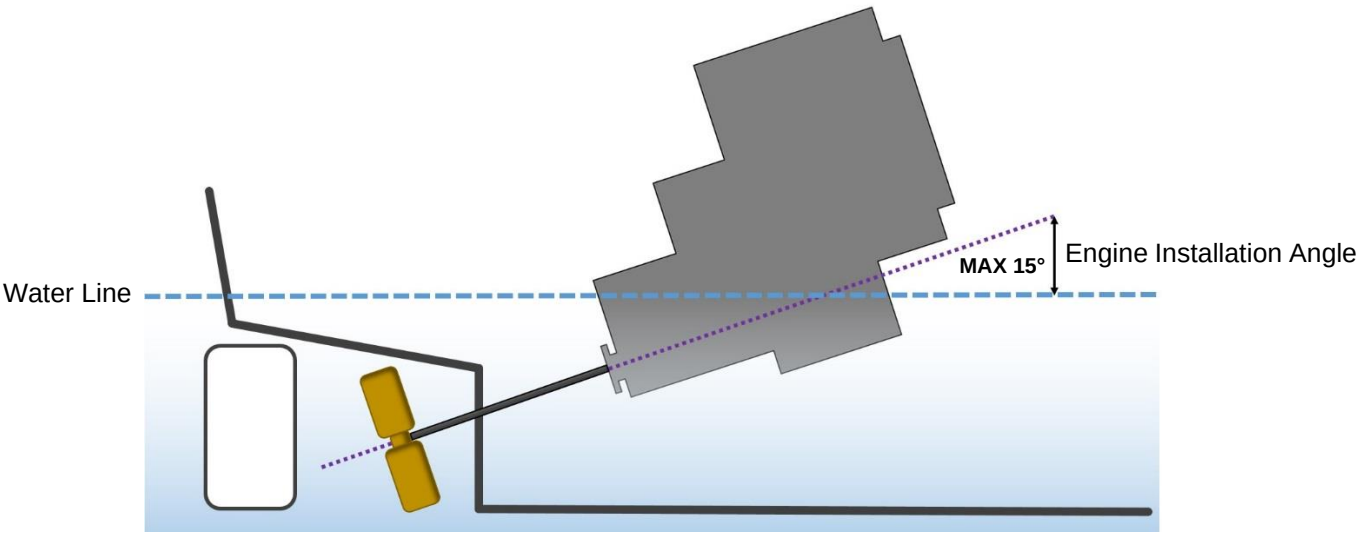

Figure 13: Maximum Engine Installation Angle

8. Electrics

CAUTION

- Do not attach any part, hose or cable to the engine wiring harness. There is a warning label attached to the harness to remind you of this.
- Connect the wiring extension harness multi plug to the panel plug and the other end to the engine.
- Connect the start battery positive cable to the engine starter motor solenoid terminal.
- The starter motor battery cable must have a cross sectional area of at least 50mm^2.
- For twin alternator engines, connect the domestic battery positive cable to the 70A alternator B+ terminal (see wiring diagram). This ensures that the 50A alternator charges the start battery and the 70A alternator charges the domestic battery, removing the requirement for a split charging system or relay.
- Negative battery terminal must be connected to a common earth point.

9. Electrical Options

DANGER:

ELECTRIC SHOCK RISK!

- Standard engine is a single 50A Alternator.
- Option 1, is a single 70A Alternator. (SS1491)
- Option 2, is Twin Alternators 50A and 70A
- Electrically operated stop solenoid (energise to run). (SS1553 or SS1554)
- Deluxe Control Panel. (SS1551)

10. Engine Oil

WARNING:

BURN HAZARD! WAIT UNTIL THE ENGINE COOLS BEFORE YOU DRAIN THE ENGINE OIL. HOT ENGINE OIL MAY SPLASH AND BURN YOU.

NOTICE:

ENGINE OIL WITH A HIGHER API CLASS THAN CD IS UNSUITABLE FOR CANAL BOAT OPERATION AND WILL CAUSE ENGINE DAMAGE IF USED.

- All engines are supplied fully run in.
- Check oil levels in engine and gearbox before starting
- Use good quality engine oil SAE 10W / 40 API class CD.

11. Fuel

WARNING:

DIESEL FUEL IS FLAMMABLE AND EXPLOSIVE UNDER CERTAIN CONDITIONS.

WARNING:

DIESEL FUEL IS HARMFUL TO SKIN. MAKE SURE THE RELEVANT PERSONAL PROTECTION EQUIPMENT IS WORN.

- Ensure the main fuel tank is clear of dirt and water.
- A separate water trap must be fitted to all engine installations.
- Connect fuel feed return hoses from engine to main supply and return lines to main fuel tank, ensuring they are connected the correct way around. The hose to the fuel pump is the inlet.
- The engine hoses are supplied with 5/16” (8mm) OD metal hose tails and should be securely fitted to the main supply and return pipes with compression fittings.
- The engine hoses should have sufficient slack to absorb engine movement without placing strain on the hoses and be securely clipped to prevent accidental damage and chafing.
- Loosen the bleed screw on the top of the primary fuel filter/water trap. Depress and pump the spring loaded plunger on top of the fuel filter assembly. Close when fuel begins to flow clearly (no bubbles). It is rarely necessary to bleed the injection pump or injectors upon installation as the engine will already have fuel in it from the engine run in and test procedure.

12. Coolant

WARNING:

SCALD HAZARD! NEVER REMOVE THE COOLANT BOTTLE CAP IF THE ENGINE IS HOT. STEAM AND HOT COOLANT WILL SPURT OUT AND CAUSE INJURY. TIGHTEN THE CAP SECURELY AFTER BEING REMOVED. STEAM CAN SPURT OUT DURING ENGINE OPERATION IF THE CAP IS LOOSE.

WARNING:

BURN HAZARD! WAIT UNTIL THE ENGINE COOLS BEFORE YOU DRAIN THE ENGINE COOLANT. HOT ENGINE COOLANT MAY SPLASH AND BURN YOU.

WARNING:

BURN HAZARD! THE WATER COOLED EXHAUST MANIFOLD IS HOT AND MAY BURN YOU.

- Prepare coolant mix of 50% clean tap water and 50% antifreeze. Please make sure that the antifreeze used is suitable for the silicone hoses fitted to the engine.
- Open the calorifier taps (if fitted) to fill the calorifier system and displace air.
- Remove filler cap on top of water cooled exhaust manifold and fill cooling system through here. Run engine at idle for a few minutes with cap removed to ensure air is removed and allow a 13mm (1/2”) air gap in top of manifold to allow for expansion.

Calorifer - Optional:

- The calorifiers are positioned as per (**Figure 14**)

Inlet	Outlet
	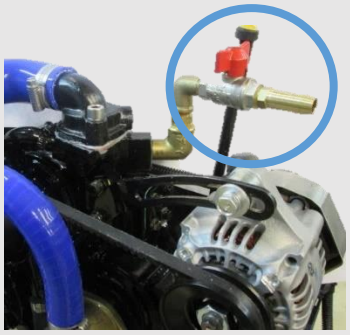

Figure 14: Position of Calorifiers

- The temperature of coolant flowing to the calorifier from the engine can be between 85 and 90°C. A blender valve must be incorporated in the calorifier/hot water system outlet to lower the hot water temperature for domestic use.

13. Control Cables

- Connect engine speed control cable. With the engine off, ensure that the engine speed control lever achieves full travel from idle to full speed. Adjust if necessary.
- Check the gearbox shift lever selects positively and that the drive direction corresponds with the gearshift control lever. Ensure that the gearbox control lever and the gearshift lever are both in neutral before connection. Adjust if necessary.

14. Domestic Battery Bank

DANGER:

EXPLOSION HAZARD! NEVER SHORT OUT THE BATTERY TERMINALS, INCLUDING WHEN CHECKING THE REMAINING BATTERY CHARGE THIS WILL RESULT IN A SPARK AND MAY CAUSE AN EXPLOSION OR FIRE.

WARNING:

BURN HAZARD! BATTERIES CONTAIN SULPHURIC ACID. NEVER ALLOW BATTERY FLUID TO COME IN CONTACT WITH SKIN, EYES OR CLOTHING. SEVERE BURNS COULD RESULT. MAKE SURE THE CORRECT PERSONAL PROTECTION EQUIPMENT IS WORN.

For boats with single alternators and using domestic batteries, it is strongly advised to use a split charge relay system and separate batteries. This will ensure that the start battery does not become discharged.

15. Control Panel

CAUTION

Engines are supplied with an engine control panel that shows RPM and hours run (the Basic Panel does not have this fitted) and include warning lights and a warning buzzer. The deluxe panels also have additional gauges for the water temp, oil pressure and battery charging. The panels are designed to be splash proof and are correctly installed with the gauges vertical. Do not install so that they remain out in the open, or cover up when not on use.
The control panel engine tachometer is supplied already calibrated to measure correct engine speed. If a new control panel, tachometer or alternative alternator is fitted, the tacho will require re-calibrating.

Control Panel Calibration Procedure:

- Connect Control panel plug to engine wiring loom plug.
- Turn ignition on (do not start engine).
- Press and hold black button on rear of tacho until “H-“appears on the digital display at the bottom of the tacho (on the front).
- When pressing and holding the black button on rear of tacho, the value displayed will increase / decrease until the button is released. Then when pressing again it will increase / decrease in the other direction. Keep doing this until the digitally displayed value on the bottom of tacho reaches the correct value, according to the type of alternator (see below table). This must be set to the alternator with blue and black wire connected to it.
- Confirm settings to tacho meter reader.
- An optical tachometer is required to check the reading.

Alternator (Amps)	Tacho reading
50	10.50 – 11.00
70	15.00
50 and 70 (Twin Alts)	Only the 50 Amp Alternator requires calibration

Alternative or non-standard alternators will require calibrating and checking by trial and error,

with a hand held tacho until the engine speed and indicated tachometer speed are the same.

16. Exhaust System (Sea Water Cooled Boat)

WARNING:

EXHAUST HAZARD! NEVER OPERATE ENGINE WITHOUT PROPER VENTILATION. NEVER BLOCK VENTS OR OTHER MEANS OF VENTILATION. ALL COMBUSTION ENGINES CREATE CARBON MONOXIDE GAS DURING OPERATION. ACCUMULATION OF THIS GAS COULD CAUSE ILLNESS OR EVEN DEATH.

Use 50mm ID suitable marine flexible exhaust hose on the engine. The exhaust system must not be restricted in any way.
Note: If the engine is installed low down in the boat, below the outside water level, a system such as a Lift Silencer with a siphon break system, must be used to prevent sea water from flowing back down the exhaust and into the engine.

- **Lift Silencer**

  The correct installation of the lift silencer is vital to safety, and to avoid back flooding of the engine. **Figure 15** shows how to install the lift silencer correctly (Note: Halyard (M&I) Limited have given Thornycroft permission to use the diagram).

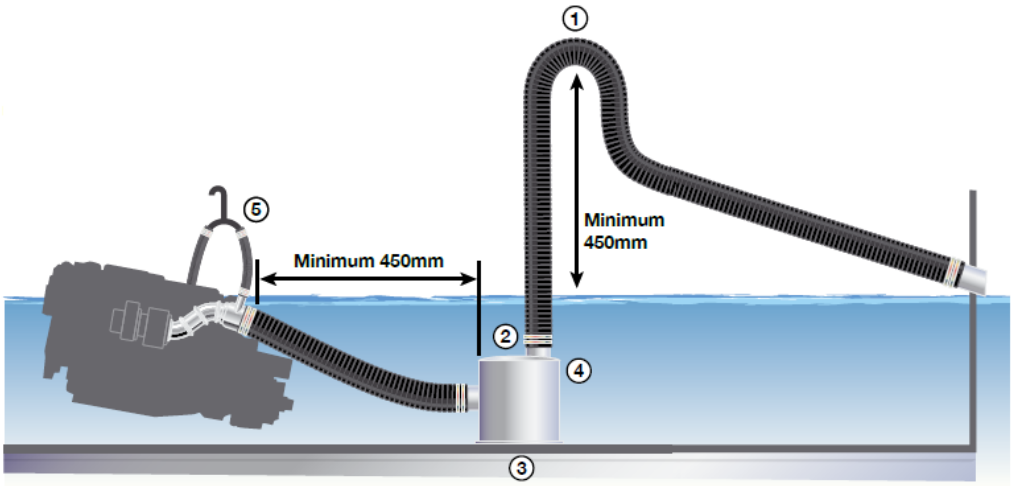

Figure 15: Correct Installation of the Lift Silencer

1. The swan neck must reach at least 450mm (18”) above the waterline, when installed on hull centreline.
2. The top of the silencer should be at least 300mm (12”) below the water injection

point.

3. The silencer must be installed as near as possible to the centreline of the hull, particularly where severe angles of heel are expected. The swan neck must be 450mm above heeled water line.
4. Remember that 15% of the volume of the exhaust hose may be water. The size of the silencer selected must be such that water draining into it will fit it by no more than one third.
5. A siphon break must be used.

The silencer may only be used in a Water Injected marine exhaust system. The overall design of the system, and choice of components, will have a result on the back pressure in the exhaust which is vital to the performance and life of the engine. **Thornycroft recommend that Halyard (M&I) Limited are used for the Lift Silencer, Siphon Break and other components. Contact Halyard (M&I) Limited for further information.** The silencer must be drained before the boat is craned or transported and during the winter.

There must be at least 450mm distance between the water injection point and the position of the silencer to allow adequate cooling of the exhaust gases. Maximum temperature during continuous operation of the silencer is limited to 85 degrees centigrade. Normally in a well-designed system, the temperature of the silencer should be between 50-70 degrees centigrade. Such operation will result in longer exhaust life.

Connections to the silencer should be made using suitable exhaust hose, which is type approved by Lloyds and DNV. Do not use oil or grease to lubricate hoses when installing, wetting the inside of the hoses with water will help them slip more easily over the silencer spigots. A minimum of 2 hose clips must be used. Securely tighten all hose clamps, but be careful not to overtighten.

The silencer should be positioned within 300mm of the centre line of the vessel, or to the engine on which it is installed. This is particularly important on sailing vessels where a substantial angle of heel can be encountered. On systems where the exhaust manifold is near or below the water line. A siphon break should be used to prevent the water flow continuing after the engine shut down.

In all installations the silencer should be at the lowest point if the entire exhaust system. The top of the silencer should be at least below the exhaust manifold outlet for the best performance. If a distance less than is allowed, the margin of safety for preventing reverse

flow of water toward the manifold will decrease.

- **Siphon Breaker Fitting Instructions**

    1. The unit must be positioned upright, well above waterline. The height above waterline will vary from vessel to vessel but will be between 150mm and 2 metres. Please seek guidance on this if you are unsure, or if you are not familiar with the correct way to incorporate a siphon breaker into your particular exhaust system.
    2. The inverted “U” bend at the top must be connected to a hose draining into the bilge, or over the side of the vessel. In no circumstances must this drain into a sealed container, such as a bottle due to the risk of back siphoning. After fitting, run the engine and check the unions for leaks. Check again after 5 running hours.
    3. The siphon break is equally suitable for use with a marine toilet water inlet.
    4. The ½” unit may also be used with 5/8” systems. The 3/4” and 1” units may only be used with the correct hose.

- **Siphon Breaker Maintenance**
    1. On commercial vessels achieving in excess of 150 engine hours per year, the unit should have the small valve removed from the top and this should be thoroughly washed in warm soapy water to remove salt encrustation.
    2. On a pleasure vessel this should be done twice a year.
    3. On reassembly the engine should be run and the unit checked for leaks. The hose junctions should also be checked for leaks as part of the daily inspection procedure for sea cocks, water pipes, oil levels, etc.

17. Hydraulic Drive Transmissions

If an engine is to have a hydraulic drive transmission attached to it instead of a conventional marine gearbox, a number of points must be observed.

- Bobtail engines (i.e. Engines supplied without a marine gearbox), normally do not have a gearbox oil cooler fitted. However if a cooler is supplied, this will only be suitable to cools a conventional marine gearbox.
- Hydraulic drive transmissions generate far more heat than a conventional marine gearbox. Therefore the size of the oil cooler installed must be calculated by the hydraulic drive transmission supplier. This is to ensure it has sufficient cooling capacity and is sized appropriately taking into account:

    - Maximum engine power.

- High ambient summer air temperature.
- Summer River/Canal/Sea temperature.
- No additional restriction to engine coolant flow is present.

Skin tanks will also need to be increased by up to approx. 10% to dissipate the additional heat generated, when a hydraulic drive system or hydraulic bow thruster is used.

An additional separate skin tank of suitable capacity with separate water circulating pump will need to be fitted for a hydraulic drive transmission.

Hydraulic oil coolers should be installed in the seawater cooling system after the engine, not before. Coolers that are installed before the engine will invalidate the engine warranty.

18. Installation Check List

	Please tick box ✔
Engine alignment correct, clearance all round, check propeller turns by hand (Ensure ignition is off battery and battery master switch is off)	
Anti-Vibration mounts correct height, spacers if necessary. Make sure all nuts are tight	
Exhaust system as specified	
Battery leads are of correct size, tightened and start battery is charged	
Check tension of alternator belts & wiring connected	
Belt alignment checked and corrected if necessary	
Check fuel system is connected correctly and primed	
Fuel line water trap installed and water drained off	
Check header tank and skin tank connections are correct way round, constant pipework rise to header tank	
Check level of coolant in header tank and correct ratio of antifreeze to water	
All air has been bled from skin tank, calorifier and pipework	
Engine and gearbox oil levels are as specified	
Throttle and gear cables correctly adjusted and operating smoothly	
All pipework and cabling supported and not chaffing, slack to allow movement of engine	
Engine control panel installed in a position where it is not out in the open	
Confirm engine control panel, gauges and warning lights are all operational	
Suitable specification of hose between seacock and seawater pump with no restrictions is fitted	
Run the engine for 20 minutes with the boat tied up and in gear (at ½ speed). Check for leaks and that all systems operate correctly	
Check & Set the Engine Idle Speed to 850-875 rpm	
Check for leaks	
Explain/Demonstrate daily/weekly/periodic maintenance checks	
Explain/Demonstrate off season storage and maintenance	
Installer's signature	
Installer name/company	

SECTION 6 – Operation

NOTICE:

REFER TO THE THORNYCROFT MANUAL PRIOR TO STARTING THE ENGINE.

1. Starting the engine for the first time

- Remove ignition key.
- Ensure all oil and coolant levels are checked.
- Ensure both the engine and domestic batteries are connected. Both battery master switches must be turned on. Failure to do so may damage the domestic alternator.

2. Starting Procedure

- Ensure there is no one in the engine compartment.
- Ensure the engine compartment door is closed.
- Ensure the gearshift control level is set to neutral and that all persons are clear of any moving parts.
- Insert ignition key.
- For standard engines ensure the fuel stop knob is pushed in, into the run position.
- Turn key to on position.
- Observe warning lights (and gauges on deluxe panel). Note: The engine water temperature overheat warning light will only come on for a brief period of time when the ignition is first turned on as a bulb check. It will then only illuminate in the case of the engine coolant temperature exceeding the maximum safety level.
- Listen for warning buzzer.
- The cold starter glow plug light will illuminate.
- When the glow plug light extinguishes, turn key to second position, start, and hold to crank.
- Crank the engine for no more than 15 seconds.
- On engine start, immediately release key.
- Key will return to first position, on.
- The warning buzzer will stop and on the deluxe panel the oil pressure gauge will show an oil pressure of 3.1-4.1 bar (45-60 psi).
- Should any warning light not go out, or if there is no reading on the oil pressure gauge, the buzzer will continue sounding. In this case, stop the engine immediately and check the relevant system. Note: If the charge light does not go out, briefly increase the engine speed.

- Stop engine immediately if any abnormal noises are detected.
- Visually check the engine for oil, fuel and coolant leaks (after initial start-up and at regular intervals). Note: The engine must be stopped and ignition key removed to carry out this check.

3. Stopping Procedure

For Standard Engine:

- Move speed control lever to the idle position.
- Pull manual stop control knob on control panel.
- Turn ignition key to off position.

For Engine with Optional Electric Stop:

- Move speed control lever to idle position.
- Turn key to off position.

4. Full Load Running

- Running diesel engines near there rated output (maximum load) regularly will disperse accumulated carbon and condensation, enhancing engine life and reducing emissions.
- Running the engine at, or near maximum speed whilst in gear may not be possible on inland waterways with speed limits in place. This will have to be carried out whilst moored up. Ensure that the mooring ropes and posts are strong enough to allow this and that the water is deep enough not to damage the propeller. It is recommended that the engine is run at or near full load for 15 minutes (maximum revs, in gear) every 50 hours.

5. Refuelling

WARNING:

DIESEL FUEL IS FLAMMABLE AND EXPLOSIVE UNDER CERTAIN CONDITIONS.

WARNING:

DIESEL FUEL IS HARMFUL TO SKIN. MAKE SURE THE RELEVANT PERSONAL PROTECTION EQUIPMENT IS WORN.

- All engines run on diesel fuel. **DO <u>NOT</u> USE BIODIESEL**
- Please note that when the vessel is to be left for any period of time, the fuel tank should be left full to eliminate the build-up of condensation and formation of water in the fuel tank.
- Engine to be turned off while refuelling
- The fuel type for all engines is diesel. **<u>DO NOT USE BIODIESEL.</u>**

6. Diesel Fuel Additive

The use of diesel fuel additive is strongly recommended on engines. The quality of the fuel available when cruising is often unknown; also the fuel may have been in storage for long periods of time. The use of additives will ensure that your engine fuel injection system is in top condition. This should result in many years of smooth reliable operation without the cost and inconvenience of expensive breakdowns due to poor quality fuel. It has also been found that improvements in fuel consumption and start ability are an added benefit of using this product. Diesel fuel additive is available from your dealer in a handy 500ml container (Part Number: RDG80210219)

7. Exhaust Back Pressure

- The back pressure falls within the manufacturers recommended range when using the exhaust system recommended for the engine.
- The maximum allowable back pressure is 0.2 Bar (3 PSI)

8. Single Shift Control Lever Side Mount Operation - Optional (RDG9210055)

To engage forward or reverse gear:

- Lift the safety latch under the handle before shifting.

To rev the engine in neutral:

- Pull the lever out sideways from the main body.
- Lift the safety latch under the handle then shift.

SECTION 7 – Service Procedure

NOTICE:

REFER TO THE THORNYCROFT MANUAL PRIOR TO CARRYING OUT ANY SERVICE OR MAINTENANCE WORK.

WARNING:

PRIOR TO CARRYING OUT ANY SERVICE OR MAINTENANCE WORK MAKE SURE THE RELEVANT PERSONAL PROTECTION EQUIPMENT IS WORN.

1. Engine Oil and Filter Change

WARNING:

BURN HAZARD! WAIT UNTIL THE ENGINE COOLS SLIGHTLY BEFORE YOU DRAIN THE ENGINE OIL. HOT ENGINE OIL MAY SPLASH AND BURN YOU.

- Change the engine oil while the engine is still warm.
- Remove the blanking plug in the sump pump spout (6mm Allen key).
- Place a plastic tube over the spout and into a container. Operate the pump handle to empty the sump. Note: Remember to refit the blanking plug afterwards.
- Place a drip tray under the engine to catch the small amount of oil that will escape from the oil filter. Using the strap type oil filter removal tool supplied, slacken the filter from the engine block in an anti-clockwise direction. Remove the tool and spin off the filter.
- Lightly oil the new filter O ring seal and install the filter onto the engine. Spin it on in a clockwise direction and finally tighten by hand only as firmly as you can.
- Refill the sump using the oil filler cap in the rocker cover on top of the engine.
- Oil level should be to the top mark on the dipstick.
- Run the engine for 5 minutes before checking the oil level with the dipstick and top up if required.
- Do not exceed the maximum oil level marker as this may cause damage to the internal components of the engine.

2. Air Filter Check and Change

- Release the three spring clips. Pull off the end cover to reveal the filter element. The element simply pulls out.
- To fit the new element, slide the open end of the filter element into the main body. Gently push the element until fully seated. Refit the end cover.
- The air filter is constructed from pleated paper. Inspect it closely for dust or dirt. The air filter cannot be cleaned and must be replaced when dirty. The engine requires clean unrestricted air to run efficiently. Failure to maintain the air filter could result in smoke, increased fuel consumption and ultimately engine damage. Note: Only the single outer element is used for Marine engines.

3. Gearbox Oil Change

WARNING:

BURN HAZARD! WAIT UNTIL THE GEARBOX COOLS SLIGHTLY BEFORE YOU DRAIN THE GEARBOX OIL. HOT OIL MAY SPLASH AND BURN YOU.

Some engines will have a gearbox sump pump fitted. To change the oil in this circumstance, follow the same procedures as were outlined for changing the engine oil. For engines without a gearbox sump pump follow the procedure below.

- Change the gearbox oil while it is still warm (Please refer to the gearbox manual for more information).
- Place a tray beneath the gearbox that will hold at least 2 litres.
- Remove the drain plug and allow 5 minutes for the oil to drain thoroughly.
- Replace the drain plug. Ensure that the sealing washer (if used) is still in place and in good condition before tightening. Fit a new washer if required.
- Refill the gearbox with oil to the upper mark on the dipstick (the PRM 80/90 only has one mark which is the max level mark. The PRM 60 and PRM 150 have two marks, the top one is the max level and the bottom one is the minimum level). Refer to the PRM owner's manual for more details. **Section 6** contains details of oil specifications.
- Do not overfill the gearbox as this can damage the internal components.

Gearbox Model	Location of Dipstick / Filler Plug / Drain Plug
PRM 60	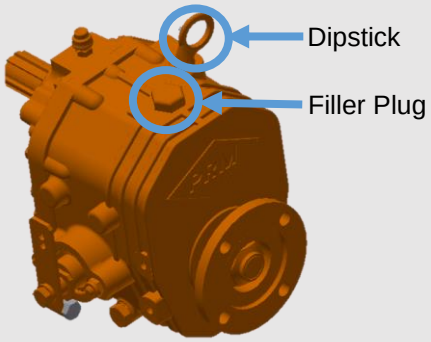
PRM 80/90	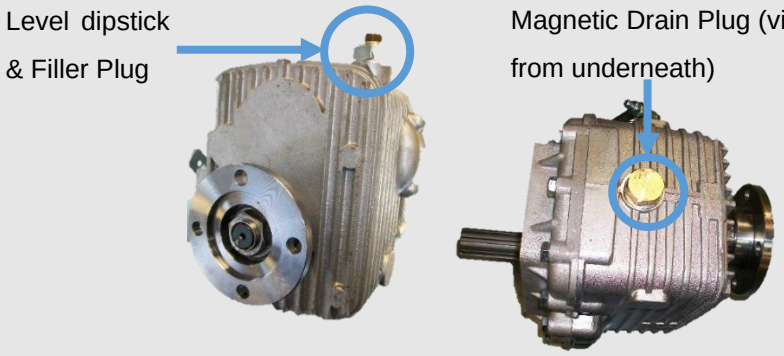
PRM 150	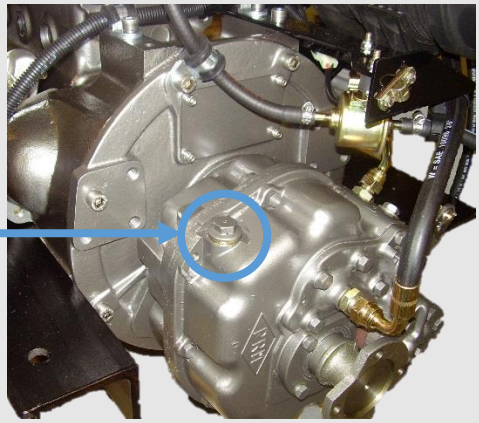

Figure 16: Location of Dipstick / Filler Plug / Drain Plug on Gearbox

4. Disposal of Oil and Related Items

NOTICE:

ALWAYS BE ENVIRONMENTALLY RESPONSIBLE.

- Please dispose of used oil and oil filters safely with due regard for the environment and take to your local waste oil disposal point.

- Do not allow oil or contaminated parts to enter the inland water way system.

5. Fuel Filter Drain – 10 /15 / 20

WARNING:

DIESEL FUEL IS FLAMMABLE AND EXPLOSIVE UNDER CERTAIN CONDITIONS.

WARNING:

DIESEL FUEL IS HARMFUL TO SKIN. MAKE SURE THE RELEVANT PERSONAL PROTECTION EQUIPMENT IS WORN.

- Place a small drain bowl under the primary fuel filter / water trap.
- Loosen the drain screw located in the bottom of the fuel filter / water trap (**Figure 17**)
- Drain off any water.
- Once the water has been drained, retighten the drain screw.
- It is unlikely the complete fuel system will require bleeding.
- Ensure the fuel tank is full prior to bleeding the fuel system.
- Run for 5 minutes.
- Check that the drain union is tight and that there are no leaks.
- Do not over tighten the drain screw.

The boat builder should have fitted an additional water trap in the fuel system. Ensure that this is drained regularly.

Figure 17: Fuel Filter Drain Screw

6. Fuel Filter Change

DANGER:

DIESEL FUEL IS FLAMMABLE AND EXPLOSIVE UNDER CERTAIN CONDITIONS.

WARNING:

DIESEL FUEL IS HARMFUL TO SKIN. MAKE SURE THE RELEVANT PERSONAL PROTECTION EQUIPMENT IS WORN.

- Ensure the fuel tank is at least ¾ full prior to undertaking this procedure.
- Turn off the main boat fuel supply tap. This is located on or near the fuel tank.
- Place a small drip tray under the filter body.
- Remove the fuel filter in the same way as the engine oil filter in **Section 7 – Service Procedure**.
- Smear a small amount of clean fuel on all of the O ring seals that are supplied with the new filter element.
- Screw the new element back into the filter head. Tighten by hand only.
- Turn the main boat fuel supply tap back on.
- Ensure the system is correctly bled before attempting to start up.

7. Fuel System Bleeding

DANGER:

DIESEL FUEL IS FLAMMABLE AND EXPLOSIVE UNDER CERTAIN CONDITIONS.

WARNING:

DIESEL FUEL IS HARMFUL TO SKIN. MAKE SURE THE RELEVANT PERSONAL PROTECTION EQUIPMENT IS WORN.

- Ensure the fuel tank is at least ¾ full prior to undertaking this procedure.
- Open the bleed screw on top of the engine fuel filter.
- Operate the fuel lift pump by hand or if there is an electric fuel pump, turn the ignition keys on.
- After the fuel filter has been purged of air, close the bleed screw.
- Undo **ALL** the injector pipe connections.
- Crank the engine over with the starter motor. When fuel can be seen, stop cranking.
- Tighten the injector pipe connections.
- Wipe off any excess fuel.
- Crank the engine.
- The engine should now start. If it does not start, repeat the above procedure.
- Check for any leaks and clean up any spilt fuel.

8. Cooling System

DANGER:

SCALD HAZARD! NEVER REMOVE THE COOLANT PRESSURE CAP IF THE ENGINE IS HOT. STEAM AND HOT COOLANT WILL SPURT OUT AND SERIOUSLY BURN YOU. TIGHTEN THE CAP SECURELY AFTER BEING REMOVED. STEAM CAN SPURT OUT DURING ENGINE OPERATION IF THE CAP IS LOOSE.

WARNING:

BURN HAZARD! WAIT UNTIL THE ENGINE COOLS BEFORE YOU DRAIN THE ENGINE COOLANT. HOT ENGINE COOLANT MAY SPLASH AND BURN YOU.

- To check the coolant level, ensure that the engine has been shut down for at least half an hour.
- Remove the lid from the water cooled exhaust manifold/heat exchanger. The level should be ½" (13mm) below the filler neck.
- If required, top up the level with coolant (50% clean tap water and 50% ethylene glycol based anti-freeze) through the expansion tank filler cap.
- Do not use water only to top up as this weakens the coolant mix, reducing the level of frost protection and anti-corrosion protection of the coolant.

9. Belt Adjustment

WARNING:

SEVERE HAZARD! KEEP HANDS AND OTHER BODY PARTS AWAY FROM MOVING/ROTATING PARTS. WEAR TIGHT FITTING CLOTHING AND KEEP YOUR HAIR SHORT OR TIE BACK. REMOVE ALL JEWELLERY BEFORE COMMENCING WORK. CHECK BEFORE STARTING THE ENGINE THAT ANY TOOLS OR RAGS USED DURING MAINTENANCE HAVE BEEN REMOVED FROM THE AREA.

- Ensure the ignition key is removed before carrying out any adjustments.
- Turn the battery master switch to the off position before carrying out any adjustments
- Depress the longest run of the drive belt to be checked. If the travel exceeds 15-20mm using hard finger pressure, the belt needs re-tensioning.
- Loosen the upper adjuster on the alternator. Loosen the lower mounting pivot nut and bolt. Pull out either using hand pressure, or a small plastic/wooden lever.
- Pull the alternator away from the engine to tighten the belt.
- Hold the alternator in position and retighten all the bolts

If the belts are over tightened, alternator bearing failure will occur.

10. Belt Maintenance

WARNING:

SEVERE HAZARD! KEEP HANDS AND OTHER BODY PARTS AWAY FROM MOVING/ROTATING PARTS. WEAR TIGHT FITTING CLOTHING AND KEEP YOUR HAIR SHORT OR TIE BACK. REMOVE ALL JEWELLERY BEFORE COMMENCING WORK. CHECK BEFORE STARTING THE ENGINE THAT ANY TOOLS OR RAGS USED DURING MAINTENANCE HAVE BEEN REMOVED FROM THE AREA.

- Ensure the ignition key is removed before carrying out any maintenance.
- Turn the battery master switch to the off position before carrying out any maintenance.
- Do not allow oil to contact the belt. Oil attacks the construction of the belt. This reduces the drive efficiency and ultimately cause it to fail prematurely.
- Replace the belt if it cracks or splits and as the adjustment nears the limit of travel.

Some boat builders may remove one or more of the alternators during the installation of the engine. It is essential that when the alternators are refitted that the alignment is perfect or premature belt wear will occur.

11. Belt Replacement

WARNING:

SEVERE HAZARD! KEEP HANDS AND OTHER BODY PARTS AWAY FROM MOVING/ROTATING PARTS. WEAR TIGHT FITTING CLOTHING AND KEEP YOUR HAIR SHORT OR TIE BACK. REMOVE ALL JEWELLERY BEFORE COMMENCING WORK. CHECK BEFORE STARTING THE ENGINE THAT ANY TOOLS OR RAGS USED DURING MAINTENANCE HAVE BEEN REMOVED FROM THE AREA.

- Ensure the ignition key is removed before replacing any belts.
- Turn the battery master switch to the off position before replacing any belts.
- Ensure that you have the correct replacement belts before starting this procedure. Some engines may have been fitted with non-standard optional alternators which may not use the belt sizes listed. Make a note of these belt sizes upon delivery.

- Loosen the top adjuster bolts and the lower mounting pivot nut and bolt.
- Push the alternator towards the engine to loosen the belt.
- Remove the belt.
- Hold the belt in position over the top alternator pulley. Rotate the engine if required by hand, to guide the new belt into the “vee”.
- Re-tension the belt as above.

12. Control Panel Maintenance

WARNING:

REMOVE THE IGNITION KEY BEFORE WORKING IN ENGINE COMPARTMENT.
TURN BATTERY ISOLATION SWITCHES OFF.

- **To replace an illumination bulb:** Release the panel from its mounting. The bulbs are accessible from the rear of the panel. Remove the wires, unscrew the nut and pull out the bulb housing from the panel. Remove the bulb and replace. Refit bulb housing, screw the nut back up and refit the wires.
- **To replace any gauge:** Release the panel from its mounting. The gauges are accessible from the rear of the panel. Unplug the wire connectors, unscrew and pull the gauge out of the panel. Replace the gauge and refit. Reattach the wiring connectors.

Periodically squirt a lubricant into the key switch slot when the key has been removed. A lubricant such as WD40 – with silicon, would be suitable. Other lubricants are available. Then with the battery master switch turned off, operate the key switch a couple of times. This will ensure the lubricant works into the mechanism.

13. Sacrificial Anode Change

- The anode is located on the water cooled manifold (**Figure 18**).

Figure 18: Sea Water Cooled Boat Anode Location

14. Raw Water Pump Impellor Change (Work Boat & River Boat)

- The pump is located on the front of the engine.
- Remove the pump cover plate.
- Remove the pump impeller (special tools are available from chandleries to assist with this task).
- Note: Do not lever against the front of the pulley housing as it is easily damaged.
- Inspect the pump housing and front housing for damage or wear.
- Replace the impellor.
- Replace the cover plate gasket if damaged.
- Replace any other worn components as necessary.

15. Engine Heat Exchanger Tube Stack Flushing

- When the engine is cold, drain the water from the engine block. Remove the plug from the engine block by the starter motor.
- Drain water from the heat exchanger. The drain plug is in the bottom of the heat exchanger / water cooled manifold.
- Mark the position and remove the end caps from the heat exchanger along with the “O” rings. When refitting the end caps please ensure that they are in the same orientation as they were previously.
- Carefully remove the tube stack from the centre of the heat exchanger.
- Fully flush between the tubes to remove any dirt of scum build up.
- Inspect the tube stack and replace if damaged.
- Clean out the manifold if required.
- Reassemble and refit, checking the end cap “O” rings are in good condition.
- Refill the engine with coolant as described earlier.

16. Winterization of Seawater Cooling System (Work Boat & River Boat)

- To prevent frost damage to the seawater cooling circuit components due to water freezing, ensure all seawater or raw water is drained from the system.
- Alternatively, run neat antifreeze through the seawater pump inlet to protect the system.
- Ensure that the antifreeze is drained before starting the engine during the next season.

This is to ensure that it does not get into the marine environment. Dispose of the antifreeze correctly.

SECTION 8 – Service Schedule

NOTICE:

REFER TO THE THORNYCROFT MANUAL PRIOR TO CARRYING OUT ANY SERVICE OR MAINTENANCE WORK.

WARNING:

PRIOR TO CARRYING OUT ANY SERVICE OR MAINTENANCE WORK MAKE SURE THE RELEVANT PERSONAL PROTECTION EQUIPMENT IS WORN.

1. Specifications and Capacities

Specification of Coolants and Lubricants to use:

Component	Lubricant
Engine	SAE 10W 40 API Class CD Oil
Coolant	50% Clean Water + 50% Ethylene Glycol Antifreeze
PRM 60/80/90 Gearbox	ATF (Automatic Transmission Fluid) Oil
PRM 150	Engine Oil

Engine Oil Capacity (with Filter):

Engine	Capacity (Litres)	Capacity (Pints)
10/15	1.73	3
20	2.6	4.5

Gearbox Oil Capacity (Excluding Cooler where fitted):

Gearbox	Capacity (Litres)	Capacity (Pints)
PRM 60	0.3	0.52
PRM 80/90	0.57	1.0
PRM 150	1.4	2.5

2. Service Intervals

	Check	Change	Notes
Engine Oil & Filter	Daily (Level)	Every 150 Hours OR 12 Months*	First change after 25 hours
Gearbox Oil	Weekly (Level)	Every 300 Hours OR 12 Months*	First change after 25 hours
Coolant Level	Daily (Level)	Every 24 Months	-
Diesel Fuel Filter**	50 hours	At first 50 hour service and then every 300 hours OR 12 Months*	Drain water every 50 hours OR Monthly***
Air Filter Element	150 Hours	Every 300 hours OR 24 Months*	Sooner if required
Drive Belts	Daily	As required	Adjust as necessary
All Hoses	50 Hours	As required	Check hoses for damage or leaks. Replace as necessary
Key Switch	Lubricate	Every 150 hours OR 12 Months*	As per instructions in Section 12 - Control Maintenance
Sea Water Pump Impellor (SB Only)	150 Hours	Every 300 hours OR 24 Months*	Sooner if required
Sacrificial Anodes	150 Hours	Every 450 hours OR 12 Months*	Check and change more frequently if local conditions require it
Main Heat Exchanger	450 Hours	-	Or check more frequently if local conditions require it. Remove & clean as per instructions in Section 5

* Whichever occurs first.

** Only filters which meet the Recreational Craft Directive should be fitted to your engine

*** If large quantities of water are found in the fuel when the filter is drained, increase the frequency of draining.

SECTION 9 – Wiring Diagrams

1. Engine Wiring Diagram Thornycroft T-10 / T-15 / T-20

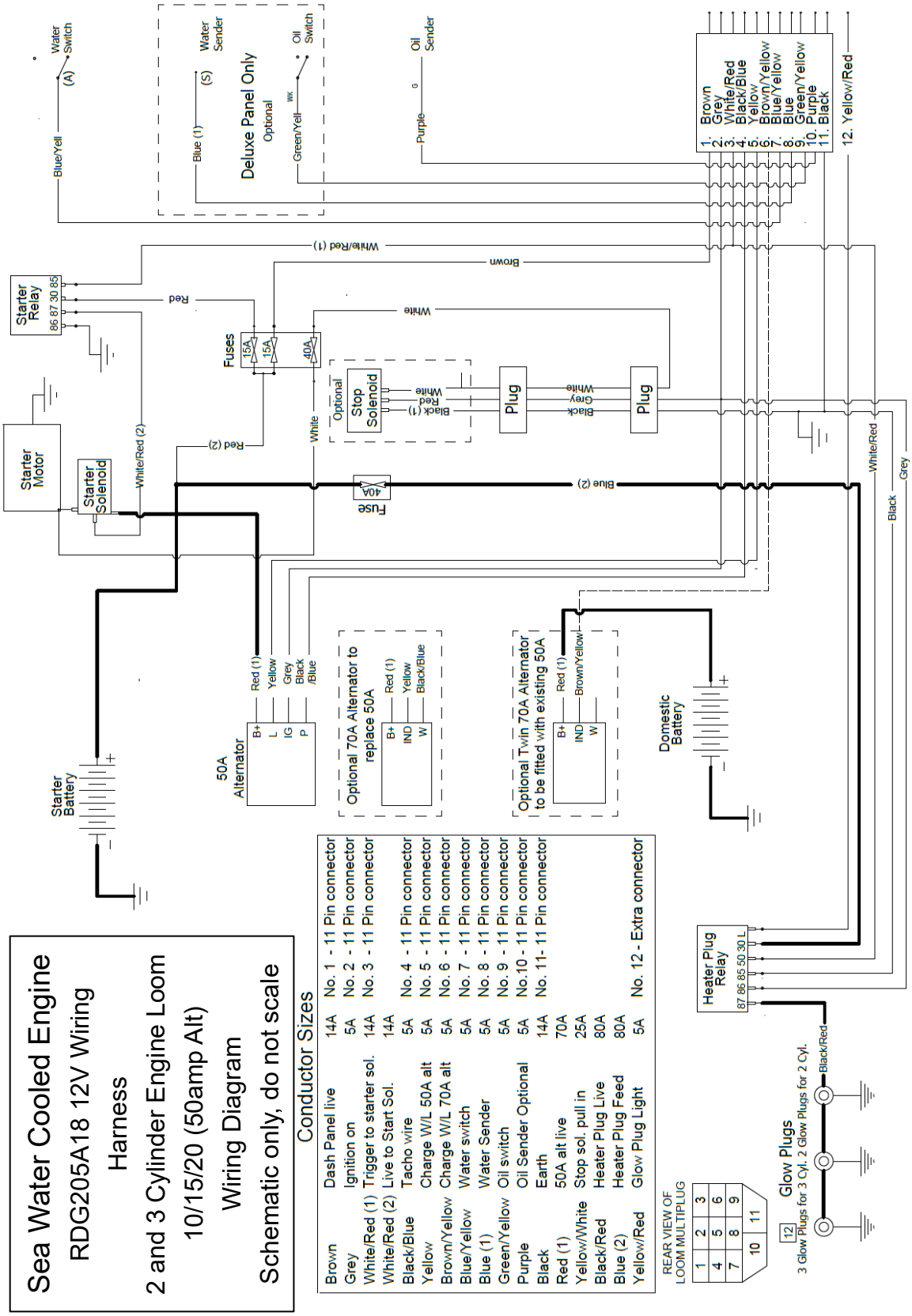

Figure 19: Wiring Diagram

2. Basic Control Panel Wiring Diagram

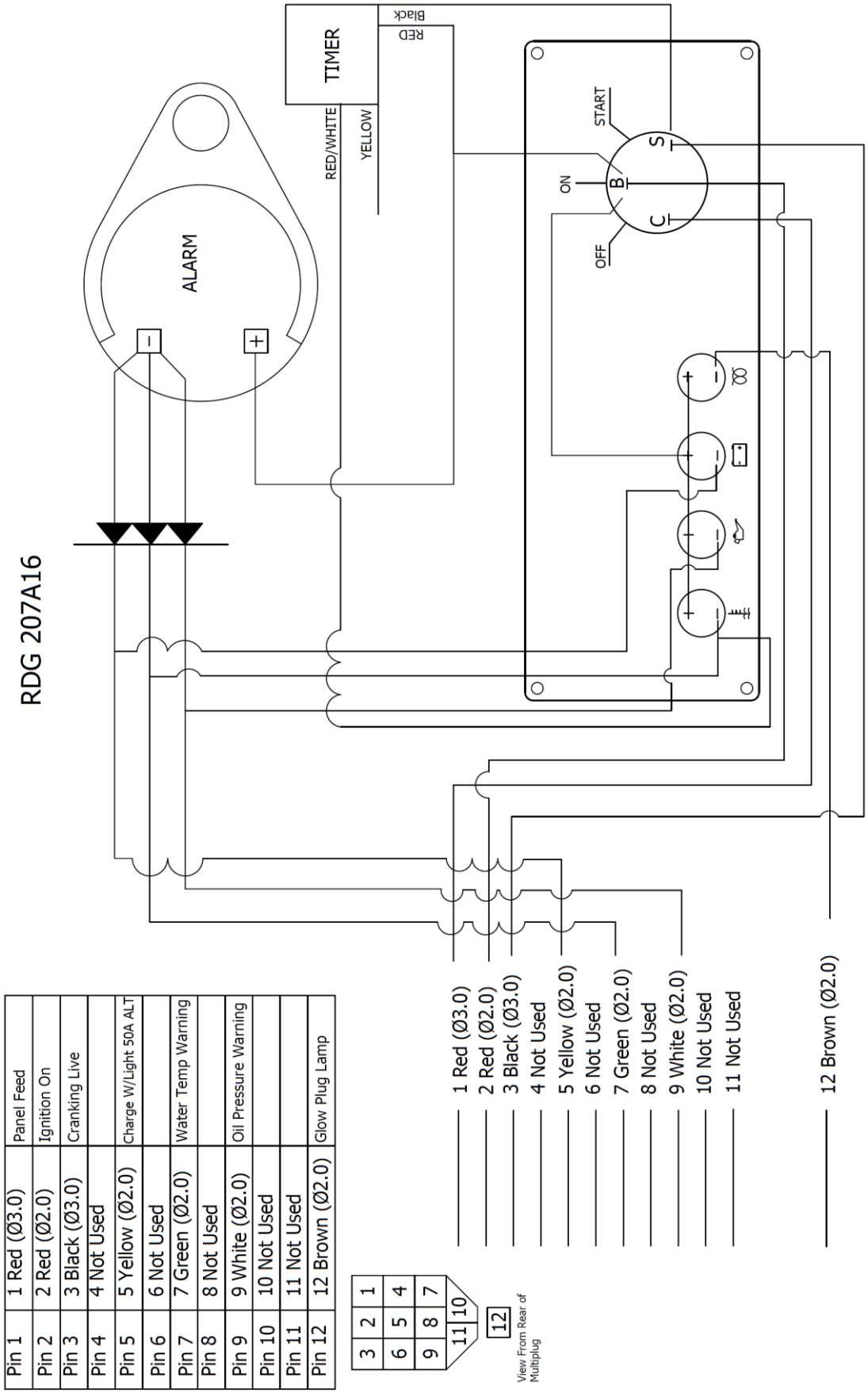

Pin 1	1 Red (Ø3.0)	Panel Feed
Pin 2	2 Red (Ø2.0)	Ignition On
Pin 3	3 Black (Ø3.0)	Cranking Live
Pin 4	4 Not Used	
Pin 5	5 Yellow (Ø2.0)	Charge W/Light 50A ALT
Pin 6	6 Not Used	
Pin 7	7 Green (Ø2.0)	Water Temp Warning
Pin 8	8 Not Used	
Pin 9	9 White (Ø2.0)	Oil Pressure Warning
Pin 10	10 Not Used	
Pin 11	11 Not Used	
Pin 12	12 Brown (Ø2.0)	Glow Plug Lamp

Figure 20: Basic Control Panel Wiring Diagram

3. Standard Control Panel Wiring Diagram

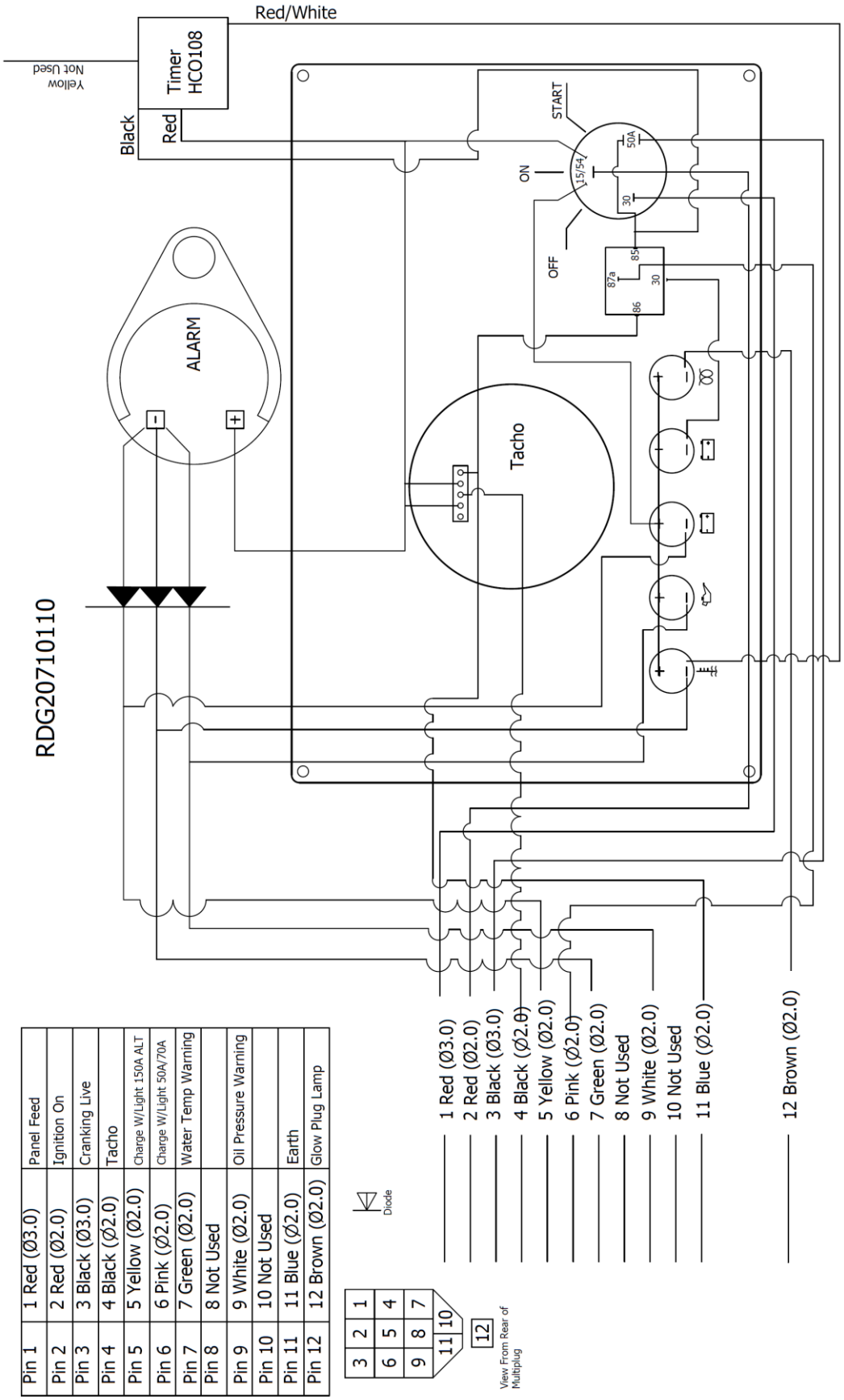

Pin 1	1 Red (Ø3.0)	Panel Feed
Pin 2	2 Red (Ø2.0)	Ignition On
Pin 3	3 Black (Ø3.0)	Cranking Live
Pin 4	4 Black (Ø2.0)	Tacho
Pin 5	5 Yellow (Ø2.0)	Charge W/Light 150A ALT
Pin 6	6 Pink (Ø2.0)	Charge W/Light 50A/70A
Pin 7	7 Green (Ø2.0)	Water Temp Warning
Pin 8	8 Not Used	
Pin 9	9 White (Ø2.0)	Oil Pressure Warning
Pin 10	10 Not Used	
Pin 11	11 Blue (Ø2.0)	Earth
Pin 12	12 Brown (Ø2.0)	Glow Plug Lamp

Figure 21: Standard Control Panel Wiring Diagram

4. Deluxe Control Panel Wiring Diagram (Additional Option – SS1551)

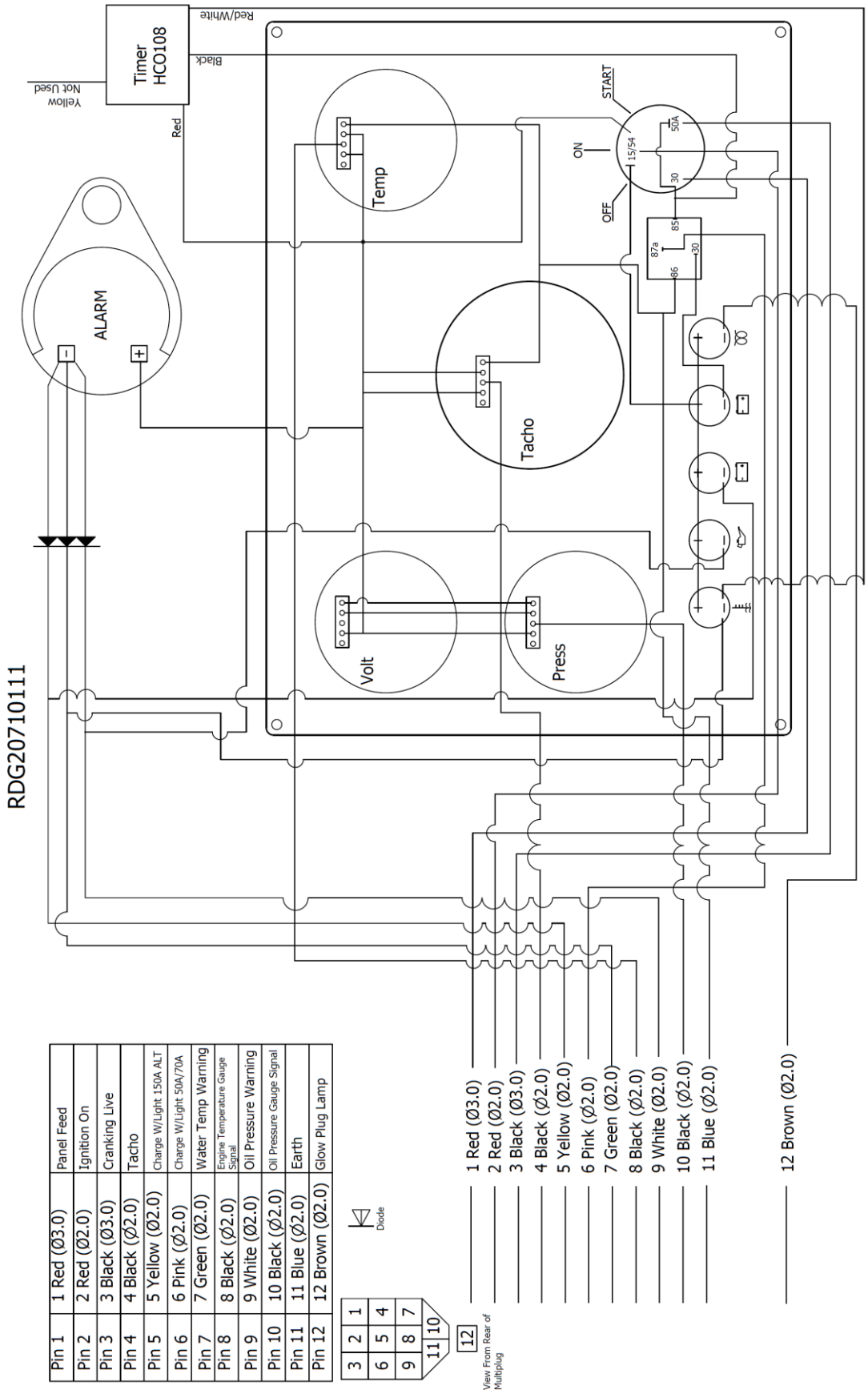

Figure 22: Deluxe Control Panel Wiring Diagram

SECTION 10 – Technical Data

1. Engine Data

Engine Model	T-10 / T-15	T- 20
Type	In Line, Water Cooled, 4 Stroke	In Line, Water Cooled, 4 Stroke
Combustion Chamber	Swirl Chamber	Swirl Chamber
Aspiration	Natural	Natural
Number of Cylinders	2	3
Bore x Stroke	78 x 78.4mm	78 x 78.4mm
Displacement (L)	0.749	1.123
Rated Output/Speed	11kW (15hp) at 3000rpm	15kw (20hp) at 3000rpm
Direction of Rotation of Crankshaft	Counter Clockwise (View from Flywheel End)	Counter Clockwise (View from Flywheel End)
Lubrication System	Combination of Pressure and Splash	Combination of Pressure and Splash
Cooling System	Forced Water Cooled	Forced Water Cooled

Valve Timing	**Intake Valve opens**	8° Before T.D.C
	Intake Valve closes	42° After B.D.C
	Exhaust Valve opens	42° Before B.D.C
	Exhaust Valve closes	14° After T.D.C
Valve Clearance (cold)	**Intake Valve (mm)**	0.15~0.20
	Exhaust Valve (mm)	0.15~0.20

Starting Motor	**Type**	QDY1257A
	Power (kW)	1.2
	Voltage (V)	12
Alternator	**Output (A)**	50
	Voltage (V)	14
Recommended Start Battery Size	**Capacity (A.h)**	≥ 65
	Voltage (V)	12

2. Return Diesel System

Maximum Fuel Temp	18.2°c
Maximum Flow	0.6 Litre / Min (2650 rpm)
Flow at Idle	0.3 Litre / Min

3. Dry Weight of Engine Data

Dry Weight of Engine (Including Gearbox)*	
Model	**Dry Weight (kg)**
T-10 / T-15	142kg
T-20	160kg

* The dry weights stated are for the standard engine in each model range. If a different gearbox or additional alternators are ordered the weight will change accordingly.

SECTION 11 – Service Parts

Model	T-10 / T-15 / T-20
Fuel Filter	RDG906A3
50A Alt Belt	GB/T12732-2008
70A Alt Belt (Single Alt Engine)	GB/T12732-2008
Air Filter Element	3011-T3-0004
Oil Filter	119305-35170
Sea Water Pump Impeller	RDG010A3
Sea Water Pump	RDG907A4
Zinc Anti Corrosive Anode	80162
Zinc Sticker	124220-09340

Control Panel:

Basic Control Panel	RDG207A16
Standard Control Panel	RDG20710110
Deluxe Control Panel	RDG20710111

Fuses & Relays:

The electrical system is fitted with three or four blade type fuses:

1	Engine Stop Control System Fuse	40amp	RDG3246
2	Control Panel Supply Fuse	15amp	RDG3245
3	Engine Start Control System Fuse	15amp	RDG3245
4	Glow Plug Fuse	40amp	RDG3246
5	Cold Start Relay	-	RDG5279
6	Starter Relay	-	RDG1396

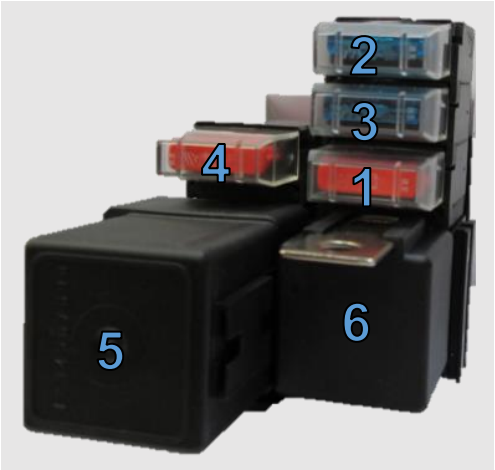

Figure 23: Fuses & Relays

Engine Oil:

Engine Oil is available from your Dealer in convenient 5 litre containers (Part Number RDG6110).

Diesel Fuel Additive:

Diesel fuel additive is available from your Dealer in a handy 500ml container (Part No RDG80210219).

SECTION 13 – Declarations

1. Declaration of Conformity for Recreational Craft Propulsion Engines to the Directive No 2013/53/EU

Name of Engine Manufacturer: **E.P.Barrus LTD**

Name of Authorised Representative: **Thornycroft Engines LTD**
Address: **Unit 1 Townsend Buildings, Melbury Osmond, Dorchester, Dorset, DT2 0LP, England, United Kingdom**

Name of Notified Body for exhaust emission assessment: HPi Verification Services (Ireland) Ltd
Address: Clonross
Town: Dunshaughlin Post Code: A85 XN59
Country: Ireland ID Number: 1521

Conformity assessment module used for exhaust emissions: ☐ B+C ☐ B+D ☐ B+E ☐ B+F ☐ G ☐ H
Or engine type-approved according to: Directive 2013/53/EU
Other Community Directives applied:

Description of Engine(s) and Essential Requirements

Engine Type: Inboard Engine **Fuel Type**: Diesel
Combustion Cycle: 4 Stroke

Identification of Engine(s) covered by this Declaration of Conformity

Engine Model	Engine Type	Engine Family code	Type Approval Certificate Number
T-10	2M78	M78	HPiVSie/iR1105-002-I-01
T-15	2M78	M78	HPiVSie/iR1105-002-I-01
T-20	3M78	M78	HPiVSie/iR1105-002-I-01

Essential Requirements	Standards	Other normative document/method.	Technical file	Specify in more detail *= Mandatory standard.
Annex 1.B- Exhaust Emissions				
B.1 Engine Identification	☐	☑ RCD (II)	☑	2013/53/EU
B.2 Exhaust emission requirements	☑*	☐	☐	* EN ISO 8178- 1:1996
B.3 Durability	☐	☑	☐	2013/53/EU
B.4 Owners Manual	☑	☐	☑	ISO10240
Annex 1. C- Noise Emissions	See Declaration of Conformity of the craft in which the engine(s) has(have) been installed			

This declaration of conformity is issued under the sole responsibility of the manufacturer. I declare on behalf of the engine manufacturer that the engine(s) [is (are) in conformity with the type(s) for which above mentioned EC type-examination or type approval certificate(s) has (have) been issued and][1] will meet the exhaust emission requirements of Directive 2013/53/EU when installed in a recreational craft, in accordance with the engine manufacturer's supplied instructions and that this (these) engine(s) must not be put into service until the recreational craft which it is (they are) to be installed has been declared in conformity with the relevant provisions of the above mentioned Directives.

Tim Hart
Sales Director
Signed: Bicester, UK
Date: 18/03/2020

2. Declaration of Incorporation of Partly Completed Machinery

(Original declaration according to Directive 2006/42/EC, Annex II, part 1B)

1. The manufacturer:	E. P. Barrus Limited Glen Way Launton Road Bicester OX26 4UR England United Kingdom			
2. Authorised Compiler of Relevant Technical Documentation:	Mr. Graeme Aldridge Glen Way Launton Road Bicester OX26 4UR England United Kingdom			
3. Partly Completed Machinery:	Designation:	Marine engines for propulsion of, and incorporation into, watercraft.		
	Description:		Serial No.:	and their derivatives.
		Thornycroft T-10	XX-2400-X	
		Thornycroft T-15	XX-2400-X	
	Base Engine:	2M78		
4. The essential health and safety requirements of the Directive 2006/42/EC, Annex I, relating to the design and construction of the engines have been applied and fulfilled as shown in Annex A of this Declaration. The relevant technical documentation is compiled in accordance with part B of Annex VII of the Directive. The engines also comply with measures against the emission of gaseous and particulate pollutants from internal combustion engines to be installed in non-road mobile machinery contained in the Directives 97/68/EC, amended by 2002/88/EC and 2004/26/EC. The engines also comply with Directive 2013/53/EU (Recreational Craft Directive), Article 6, part 4 in that the engine will continue to meet the exhaust emission requirements of either Directive 97/68/EC or of Regulation (EC) No 595/2009, as declared above, when installed in accordance with the installation instructions that accompany the engine.				
5. In case of a reasoned request by the national authority, we will supply the relevant technical information of the above named engines to the person in charge.				
6. This partly completed machinery must not be put into service until the final machinery into which it has been incorporated has been declared in conformity with the provisions of this directive, where appropriate.				
7. This declaration is made on 24 April 2017 in Bicester, Oxfordshire.				
 Tim Hart Sales Director E. P. Barrus Limited				

ANNEX A

The essential health and safety requirements for machinery can only be made compliant partly by Barrus. Therefore Barrus recommends to double-check the paragraphs from Annex 1 of the Directive 2006/42/EC mentioned below for compliance with the Directive for your particular machine.

Chapter	Subject	Applied	Fulfilled	Remark
1.1 GENERAL REMARKS				
1.1.2	Principles Of safety Integration	Yes *1	Yes*1	Consult accompanying manuals for instructions on safe installation.
	*1 For the following principles mentioned in the Directive: (a) the design and construction is fit for function as a marine engine; (b) risks have been eliminated or reduced as far as possible; Principles (c), (d) and (e) require measures to be taken by the boat builder for compliance with the directive.			
1.1.3	Materials and Products	Yes *2	Yes *2	
	*2 The engine has been designed and built using materials which are not known to present a hazard to safety or health. Use recommended fluids and filling positions only. Refer to manual for further information. Other materials used during the installation are to be designed and assessed by the boat builder.			
1.1.4	Lighting	Not Applicable		By boat builder/installer.
1.1.5	Design of machinery to facilitate its handling	Yes	Yes	All engines have appropriate packaging and lifting eyes
1.1.6	Ergonomics	Not Applicable		By boat builder/installer.
1.1.7	Operating Positions			
1.1.8	Seating			
1.2 CONTROL SYSTEMS				
1.2.1	Safety and reliability of control systems	Yes *3	No *3	
	*3 The control systems are designed and constructed to withstand the intended operating stresses and external influences. A fault in the hardware or software of the control system, errors in the control system logic, or reasonably foreseen human error during operation does not lead to hazardous situations. The operation of the control systems is to be designed and implemented by the boat builder. Contact Barrus for advice if required.			
1.2.2	Control devices	Yes *4	No *4	
	*4 The engine is fitted with the basic required control devices. The location and operation of these, and other, control systems is to be designed and implemented by the boat builder. Contact Barrus for advice if required.			
1.2.3	Starting	Yes *5	No *5	Starter motor installed
	*5 The operation of the starting system is controlled by a key switch on the panel. Contact Barrus for advice if required. The location and operation of this, and other, control systems is to be designed and implemented by the boat builder. Contact Barrus for advice if required.			
1.2.4.1	Normal stop	No *6	No *6	
	*6 The operation of the starting system is controlled by a key switch on the panel. The engine maybe fitted with a control device (energized to run stop solenoid) whereby it can be brought safely to a complete stop. The location and operation of this, and other, control systems is to be designed and implemented by the boat builder. Contact Barrus for advice if required.			
1.2.4.2	Operational stop	Not applicable		By boat builder/installer.
1.2.4.3	Emergency stop			
1.2.4.4	Assembly of machinery			
1.2.5	Selection of control or operating modes			
1.2.6	Failure of power supply			

1.3 PROTECTION AGAINST MECHANICAL HAZARDS				
1.3.1	Risk of loss of stability	Yes *7	Yes *7	
	*7 Lifting eyes are provided on the engine. The secure and stable installation of engine is to be carried out by the boat builder/installer.			
1.3.2	Risk of break-up during operation	Yes *8	Yes *8	
	*8 Instructions to indicate the type and frequency of inspections and maintenance required for safety reasons are in the accompanying manual. The mounting, positioning and/or guarding of parts where a risk of rupture or disintegration remains (in particular V-belts and pulleys), are to be made compliant by the boat builder/installer.			
1.3.3	Risks due to falling or ejected objects	Not applicable		
1.3.4	Risks due to surface edges or angles	Yes	Yes	
1.3.5	Risks related to combined machinery	Not applicable		By boat builder/installer.
1.3.6	Risks related to variations in operating conditions			
1.3.7	Risks related to moving parts	No	No	By boat builder/installer.
1.3.8	Choice of protection against risks arising from moving parts	No	No	
1.3.8.1	Moving transmission parts	No	No	
1.3.8.2	Moving parts involved in the process	Not applicable		By boat builder
1.3.9	Risks of uncontrolled movements			
1.4 REQUIRED CHARACTERISTICS OF GUARDS AND PROTECTIVE DEVICES				
1.4.1	General requirements	No	No	Guards to be specified and fitted by the boat builder/installer.
1.4.2.1	Fixed guards	No	No	
1.4.2.2	Interlocking movable guards	Not applicable		By boat builder/installer.
1.4.2.3	Adjustable guards restricting access			
1.4.3	Special requirements for protective devices			
1.5 RISKS DUE TO OTHER HAZARDS				
1.5.1	Electricity supply	Not applicable		By boat builder
1.5.2	Static electricity	Not applicable		By boat builder
1.5.3	Energy supply other than electricity	Yes *9	Yes *9	This concerns the fuel injection system and gearbox hydraulic system where fitted.
	*9 For the fuel filter, fuel injection pump, fuel injection nozzles, high pressure fuel injection pipes and fuel hoses supplied and installed on the engine by Barrus. Any other fuel system parts connected to the engine to be made compliant by the boat builder/installer.			
1.5.4	Errors of fitting	No	No	Fitting or refitting should only be done by trained and skilled personnel.
1.5.5	Extreme temperatures	Yes *10	Yes *10	Protection or warnings to be made by the boat builder
	*10 'Hot Surface' warning stickers are affixed to the rocker cover and/or the twin thermostat housing. All other protection or warnings to be made by the boat builder			
1.5.6	Fire	No	No	By boat builder
1.5.7	Explosion	No	No	

1.5.8	Noise	No	No	
1.5.9	Vibrations	No	No	
1.5.10	Radiation	No	No	
1.5.11	External radiation	Yes	Yes	
1.5.12	Laser radiation	Not applicable		
1.5.13	Emissions of hazardous materials and substances	Yes *11	Yes *11	
	*11 Except for the exhaust, fuel, and cooling water system which needs to be properly connected by the boat builder or installer according to the Thornycroft Manual.			
1.5.14	Risk of being trapped in a machine	Not applicable		By boat builder/installer.
1.5.15	Risk of slipping, tripping or falling			
1.5.16	Lighting			
1.6 MAINTENANCE				
1.6.1	Machinery maintenance	Yes	Yes	
1.6.2	Access to operating positions and servicing points	Not applicable		By boat builder/installer.
1.6.3	Isolation of energy sources			
1.6.4	Operator intervention			
1.6.5	Cleaning of internal parts	Yes	Yes	
1.7 INFORMATION				
1.7.1	Information and warnings on the machinery	Yes *12	Yes *12	
	*12 A 'Refer to manual before carrying out engine installation, operation and maintenance' label is fitted to the engine. 'Hot Surface' warning stickers are fitted on surfaces that may become hot during operation. All other protection or warnings to be made by the boat builder/installer.			
1.7.1.1	Information and information devices	Yes *13	Yes *13	
	*13 The control panel is simple to understand and use. Other control measures and information on the use of the machinery is to be carried out by the boat builder/installer.			
1.7.1.2	Warning devices	Yes *14	Yes *14	
	*14 The control panel provides warnings. The location and installation of the control panel is to be carried out by the boat builder/installer.			
1.7.2	Warning of residual risks	No	No	By boat builder/installer.
1.7.3	Marking of machinery	Yes *15	No *15	
	*15 The engine is CE marked with a brand, model designation and serial number. Full CE compliance to be carried out by the boat builder/installer.			
1.7.4	Instructions	Yes	Yes	
1.7.4.1	General principles for the drafting of instructions	Yes *16	Yes *16	
	*16 For (a) and (b). The boat builder/installer to comply with (c) and (d) for the total machine and use of it			
1.7.4.2	Contents of the instructions	Yes *17	Yes *17	
	*17 For (a), (b), (d), (e), (g), (h), (i), (k), (p), (r), (s), (t). The boat builder/installer to comply with (c), (d), (f), (g), (h), (i), (j), (l), (m), (n), (o), (q), (u), (v).			
1.7.4.3	Sales literature	Yes	Yes	

SECTION 14 – Lubricant Safety Data Sheets

1. Ground Force 10W-40

SAFETY DATA SHEET
Ground Force 10W-40

SECTION 1: Identification of the substance/mixture and of the company/undertaking

1.1. Product identifier

Product name	Ground Force 10W-40
Product number	7450
Internal identification	GHS21580
REACH registration number	n/a Mixture

1.2. Relevant identified uses of the substance or mixture and uses advised against

Identified uses	Engine oil.
Uses advised against	Non specified unless otherwise stated within this MSDS

1.3. Details of the supplier of the safety data sheet

Supplier

Morris Lubricants
Castle Foregate
Shrewsbury
SY1 2EL

08.45 - 17.00 GMT
T: (+44)(0)1743 232200
F: (+44)(0)1743 353584
sds@morris-lubricants.co.uk

1.4. Emergency telephone number

Emergency telephone +44 (0)1743 232200 (08.45 - 17.00 hrs GMT)

SECTION 2: Hazards identification

2.1. Classification of the substance or mixture

Classification

Physical hazards	Not Classified
Health hazards	Not Classified
Environmental hazards	Not Classified
Classification (67/548/EEC or 1999/45/EC)	Not Classified

2.2. Label elements

Hazard statements	NC Not Classified
Supplemental label Information	EUH210 Safety data sheet available on request.

2.3. Other hazards

This product does not contain any substances classified as PBT or vPvB.

SECTION 3: Composition/information on ingredients

3.2. Mixtures

Distillates (petroleum) solvent-dewaxed heavy paraffinic			30-60%
CAS-No.: 64742-65-0	EC No.: 265-169-7	REACH registration number: 01-2119471299-27-XXXX	
A petroleum product. DMSO extract < 3 % weight (IP 346)			
Classification Not classified.	Classification (67/548/EEC or 1999/45/EC) -		

Distillates,hydrotreated heavy paraffinic			10-30%
CAS number: 64742-54-7	EC number: 265-157-1	REACH registration number: 01-2119484627-25-0014	
Classification Asp. Tox. 1 - H304	Classification (67/548/EEC or 1999/45/EC) -		

Highly refined mineral oil (C15 - C50)			1-5%
CAS number: -	EC number: 276-738-4	REACH registration number: 01-2119474889-13-XXXX	
Classification Asp. Tox. 1 - H304	Classification (67/548/EEC or 1999/45/EC) -		

The Full Text for all R-Phrases and Hazard Statements are Displayed in Section 16.

Composition comments If REACH registration numbers do not appear the substance is either exempt from registration, does not meet the minimum volume threshold for registration, the registration date has not yet come due or this information is proprietary.

SECTION 4: First aid measures

4.1. Description of first aid measures

General information Get medical attention if any discomfort continues.

Inhalation If spray/mist has been inhaled, proceed as follows. Move affected person to fresh air and keep warm and at rest in a position comfortable for breathing. Get medical attention if any discomfort continues.

Ingestion Get medical attention if any discomfort continues. Do not induce vomiting.

Skin contact Remove contaminated clothing immediately and wash skin with soap and water.

Eye contact Rinse immediately with plenty of water. Remove any contact lenses and open eyelids wide apart. Continue to rinse for at least 15 minutes. Get medical attention promptly if symptoms occur after washing.

4.2. Most important symptoms and effects, both acute and delayed

General information If aspiration into the lungs is suspected, eg when vomitting, admit to hospital immediately.

Inhalation Upper respiratory irritation.

Ingestion May cause discomfort if swallowed. The product contains mineral oil, which if aspirated into the lungs through vomitting after ingestion, may result in chemical pneumonia.

Skin contact Prolonged contact may cause redness, irritation and dry skin.

Eye contact Irritation of eyes and mucous membranes.

4.3. Indication of any immediate medical attention and special treatment needed

Notes for the doctor Treat symptomatically.

SECTION 5: Firefighting measures

5.1. Extinguishing media

Suitable extinguishing media Extinguish with foam, carbon dioxide, dry powder or water fog.

Unsuitable extinguishing Media Do not use water jet as an extinguisher, as this will spread the fire.

5.2. Special hazards arising from the substance or mixture

Specific hazards Heat from fire could result in drums bursting

Hazardous combustion Products Protection against nuisance dust must be used when the airborne concentration exceeds 10 mg/m3. Oxides of carbon. Oxides of nitrogen. Fire may also create other unidentified organic gases some of which may be toxic.

5.3. Advice for firefighters

Protective actions during Firefighting Control run-off water by containing and keeping it out of sewers and watercourses.

Special protective equipment for firefighters Wear self-contained breathing apparatus.

SECTION 6: Accidental release measures

6.1. Personal precautions, protective equipment and emergency procedures

Personal precautions For personal protection, see Section 8. In case of spills, beware of slippery floors and surfaces.

6.2. Environmental precautions

Environmental precautions Contain spillage with sand or earth. Avoid the spillage or runoff entering drains, sewers or watercourses. The product is insoluble in water and will spread on the water surface.

6.3. Methods and material for containment and cleaning up

Methods for cleaning up Contain spillage with sand or earth. Collect spillage for reclamation or disposal in sealed containers via a licensed waste contractor. Avoid water contacting spilled material or leaking containers. Spillages or uncontrolled discharges into watercourses must be reported immediately to the Environmental Agency or other appropriate regulatory body. In case of spillage on water prevent the spread by use of suitable barrier equipment

6.4. Reference to other sections

Reference to other sections For personal protection, see Section 8. See Section 11 for additional information on health hazards. For waste disposal, see section 13.

SECTION 7: Handling and storage

7.1. Precautions for safe handling

Usage precautions Avoid spilling. Always remove oil with soap and water or skin cleaning agent, never use organic solvents. Do not use oil-contaminated clothing or shoes, and do not put rags moistened with oil into pockets.

7.2. Conditions for safe storage, including any incompatibilities

Storage precautions Store in tightly-closed, original container in a dry, cool and well-ventilated place.

Storage class Miscellaneous hazardous material storage.

7.3. Specific end use(s)

Specific end use(s) The identified uses for this product are detailed in Section 1.2.

SECTION 8: Exposure Controls/personal protection

8.1. Control parameters

Occupational exposure limits
Distillates (petroleum) solvent-dewaxed heavy paraffinic

Long-term exposure limit (8-hour TWA): ACGIH 5 mg/m³
Short-term exposure limit (15-minute): ACGIH 10 mg/m³

Distillates,hydrotreated heavy paraffinic

Long-term exposure limit (8-hour TWA): ACGIH 5
Short-term exposure limit (15-minute): ACGIH 10 mg/m³

Highly refined mineral oil (C15 - C50)

Long-term exposure limit (8-hour TWA): ACGIH 5 ppm
Short-term exposure limit (15-minute): ACGIH 10 ppm

Zinc bis[O-(6-methylheptyl)]bis[O-(sec-butyl)]bis(dithiophosphate)

Short-term exposure limit (15-minute): 10 mg/m³ mist

ACGIH = American Conference of Governmental Industrial Hygienists.

Bis(nonylphenyl)amine

DNEL
Industry - Dermal; Long term systemic effects: 0.62 mg/kg
Industry - Inhalation; Long term systemic effects: 4.37 mg/m³
Consumer - Dermal; Long term systemic effects: 0.31 mg/kg
Consumer - Inhalation; Long term systemic effects: 1.09 mg/m³
Consumer - Oral; Long term systemic effects: 0.31 mg/kg

PNEC
- Marine water; 0.01 mg/l
- Sediment (Freshwater); 132000 mg/kg
- Sediment (Marinewater); 13200 mg/kg
- Soil; 263000 mg/kg
- Fresh water; 0.1 mg/l

Phenol, dodecyl-,sulfurized, carbonates, calcium salts, overbased

DNEL
Industry - Dermal; Short term systemic effects: 80 mg/kg/day
Industry - Inhalation; Short term systemic effects: 167 mg/m³
Industry - Dermal; Long term systemic effects: 20.8 mg/kg/day
Industry - Inhalation; Long term systemic effects: 70.52 mg/m³
Consumer - Dermal; Short term systemic effects: 40 mg/kg/day
Consumer - Oral; Short term systemic effects: 50 mg/m³
Consumer - Oral; Long term systemic effects: 5 mg/kg/day
Consumer - Dermal; Long term systemic effects: 10.42 mg/kg/day
Consumer - Inhalation; Long term systemic effects: 52.6 mg/m

PNEC
- Fresh water; 0.1 mg/l
- Marine water; 0.01 mg/l
- Sediment (Freshwater); 132000 mg/kg
- Sediment (Freshwater); 13200 mg/kg
- Soil; 263000 mg/kg

Reaction mass of isomers of: C7-9-alkyl 3-(3,5-di-tert-butyl-4-hydroxyphenyl)propionate

DNEL
Industry - Dermal; Short term systemic effects: 20 mg/kg
Industry - Dermal; Short term local effects: 1 mg/cm²
Industry - Dermal; Long term systemic effects: 0.22 mg/kg
Industry - Dermal; Long term local effects: 0.006 mg/cm²

PNEC
- Fresh water; 0.0043 mg/l
- Marine water; 0.00043 mg/l
- Sediment (Freshwater); 233 mg/kg
- Sediment (Marinewater); 23.3 mg/kg
- Soil; 189 mg/kg

8.2. Exposure controls

Protective equipment

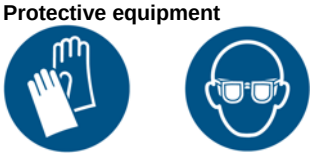

Appropriate engineering controls	Provide adequate general and local exhaust ventilation. Observe any occupational exposure limits for the product or ingredients.
Eye/face protection	Eyewear complying with an approved standard should be worn if a risk assessment indicates eye contact is possible. The following protection should be worn: Chemical splash goggles or face shield.
Hand protection	The most suitable glove should be chosen in consultation with the glove supplier/manufacturer, who can provide information about the breakthrough time of the glove material.
Other skin and body Protection	Use barrier creams to prevent skin contact.
Hygiene measures	Use engineering controls to reduce air contamination to permissible exposure level. Wash promptly with soap and water if skin becomes contaminated.
Respiratory protection	No specific recommendations. Respiratory protection must be used if the airborne contamination exceeds the recommended occupational exposure limit.
Thermal hazards	Not anticipated under normal conditions of use. The product is combustible if heated excessively and an ignition source is applied.
Environmental exposure Controls	Do not allow product to contaminate land.

SECTION 9: Physical and Chemical Properties

9.1. Information on basic physical and chemical properties

Appearance	Liquid.
Colour	Pale Amber
Odour	Characteristic. Oil-like.
Odour threshold	Not known.
pH	Not applicable.
Melting point	-39°C Pour point
Initial boiling point and range	>320°C @ 101.3 kPa
Flash point	208°C PMCC (Pensky-Martens closed cup).
Evaporation rate	Not relevant.
Upper/lower flammability or explosive limits	Not known.
Other flammability	Product is not flammable but on excessive heating may become combustible.
Vapour pressure	<0.1 kPa @ 20°C
Vapour density	Not determined.
Relative density	0.870 @ 15.6°C
Solubility(ies)	Insoluble in water. Soluble in the following materials: Organic solvents.
Partition coefficient	Not determined. log Kow: > 7 The above figure is typical of mineral oil.
Auto-ignition temperature	No specific test data are available.

Decomposition Temperature	Not determined.
Viscosity	89.4 cSt @ 40°C
Explosive properties	Not considered to be explosive.
Explosive under the influence of a flame	Not considered to be explosive.
Oxidising properties	The mixture itself has not been tested but none of the ingredient substances meet the criteria for classification as oxidising.

9.2. Other information

Volatile organic compound The product is a complex mixture, the majority of which would not be classed as a VOC. However it cannot be discounted that trace or low levels of VOC's may be present.

SECTION 10: Stability and reactivity

10.1. Reactivity

Reactivity There are no known reactivity hazards associated with this product.

10.2. Chemical stability

Stability Stable at normal ambient temperatures and when used as recommended.

10.3. Possibility of hazardous reactions

Possibility of hazardous reactions	Unlikely to occur under normal conditions of use. Unlikely to occur.

10.4. Conditions to avoid

Conditions to avoid	Avoid heat, flames and other sources of ignition.

10.5. Incompatible materials

Materials to avoid	Strong oxidising agents.

10.6. Hazardous decomposition products

Hazardous decomposition Products	Oxides of carbon. Oxides of nitrogen.

SECTION 11: Toxicological information

11.1. Information on toxicological effects

Acute toxicity – oral **Notes (oral LD_{50})**	Not expected to be highly toxic based on information of ingredients. Based on available data the classification criteria are not met.
Acute toxicity – dermal **Notes (dermal LD_{50})**	Not expected to be highly toxic based on information of ingredients. Based on available data the classification criteria are not met.
Acute toxicity – inhalation **Notes (inhalation LC_{50})**	Not determined. The product is unlikely to present any significant inhalation hazard at ambient temperatures and under normal conditions of use.
Serious eye damage/irritation **Serious eye damage/irritation**	May cause mild, short lasting discomfort to eyes.
Respiratory sensitisation **Respiratory sensitisation**	No evidence to suggest the product will be a respiratory sensitiser. Repeated exposure to oil mists may cause respiratory damage.
Skin sensitisation **Skin sensitisation**	Not expected to be a skin sensitizer based on information on components.

Carcinogenicity

Carcinogenicity	This product contains mineral oils which are considered to be severly refined and not considered to be carcinogenic under IARC. All of the oils in this product have been demonstrated to contain less than 3% extractables by the IP346 test

Reproductive toxicity

Reproductive toxicity - fertility	No data available to suggest the product will cause reproductive toxicity.

Specific target organ toxicity - single exposure

STOT - single exposure	Based on available data the classification criteria are not met.

Specific target organ toxicity - repeated exposure

STOT - repeated exposure	Based on available data the classification criteria are not met.

Aspiration hazard

Aspiration hazard	Kinematic viscosity > 20.5 mm²/s. The product viscosity is greater than the upper limit assigned for classification. The product contains mineral oil. If aspirated into the lungs e.g. through vomitting after ingestion admit to hospital immediately.
General information	This product has low toxicity. Only large quantities are likely to have adverse effects on human health.
Inhalation	Unlikely to be hazardous by inhalation because of the low vapour pressure of the product at ambient temperature.
Ingestion	No harmful effects expected from quantities likely to be ingested by accident.
Skin contact	Skin irritation should not occur when used as recommended. Repeated exposure may cause skin dryness or cracking.
Eye contact	May cause temporary eye irritation.
Acute and chronic health Hazards	Prolonged or repeated contact with used oil may cause serious skin diseases, such as dermatitis and skin cancer.

SECTION 12: Ecological Information

Ecotoxicity	Based on available data the classification criteria are not met. Not regarded as dangerous for the environment.

12.1. Toxicity

Toxicity	Based on available data the classification criteria are not met. Not considered toxic to fish.
Acute toxicity – aquatic Invertebrates	Based on available data the classification criteria are not met.

12.2. Persistence and degradability

Persistence and degradability	The product contains mineral oil which has limited biodegradability in CEC test methods but will biodegrade slowly in aerobic water and sediments and is considered ultimately biodegradable.
Stability (hydrolysis)	The product is based on highly refined mineral oils that are considered stable to hydrolysis.
Biodegradation	The product is not considered readily biodegradeable, albeit the major constituents are expected to ultimately biodegrade.
Biological oxygen demand	Not determined.
Chemical oxygen demand	Not determined.

12.3. Bioaccumulative potential

Bioaccumulative potential	Bioaccumulation is unlikely to be significant because of the low water-solubility of this product.
Partition coefficient	Not determined. log Kow: > 7 The above figure is typical of mineral oil.

12.4. Mobility in soil

Mobility	The product is non-volatile. The product is insoluble in water and will spread on the water surface.
Henry's law constant	Not determined.

12.5. Results of PBT and vPvB assessment

Results of PBT and vPvB assessment This product does not contain any substances classified as PBT or vPvB.

12.6. Other adverse effects

Other adverse effects None known.

SECTION 13: Disposal considerations

13.1. Waste treatment methods

General information This material and its container must be disposed of as hazardous waste. Dispose of waste via a licensed waste disposal contractor.

Disposal methods Waste, residues, empty containers, discarded work clothes and contaminated cleaning materials should be collected in designated containers, labelled with their contents. Dispose of waste via a licensed waste disposal contractor.

Waste class European waste catalogue (EWC) number = 13 02 08* (other engine, gear and lubricating oil)

SECTION 14: Transport information

General The product is not covered by international regulations on the transport of dangerous goods (IMDG, IATA, ADR/RID).

14.1. UN number
Not applicable.

14.2. UN proper shipping name
Not applicable.

14.3. Transport hazard class(es)
No transport warning sign required.

14.4. Packing group
Not applicable.

14.5. Environmental hazards
Environmentally hazardous substance/marine pollutant

14.6. Special precautions for user
Not applicable.

14.7. Transport in bulk according to Annex II of MARPOL73/78 and the IBC Code
Transport in bulk according to Annex II of MARPOL 73/78 and the IBC Code Not applicable.

SECTION 15: Regulatory information

15.1. Safety, health and environmental regulations/legislation specific for the substance or mixture

National regulations Health and Safety at Work etc. Act 1974 (as amended).
The Chemicals (Hazard Information and Packaging for Supply) Regulations 2009 (SI 2009 No. 716).
Control of Substances Hazardous to Health Regulations 2002 (as amended).
The Carriage of Dangerous Goods and Use of Transportable Pressure Equipment Regulations 2009 (SI 2009 No. 1348) (as amended) ["CDG 2009"].

EU legislation Dangerous Preparations Directive 1999/45/EC.
Dangerous Substances Directive 67/548/EEC.
Regulation (EC) No 1907/2006 of the European Parliament and of the Council of 18 December 2006 concerning the Registration, Evaluation, Authorisation and Restriction of Chemicals (REACH) (as amended).
Regulation (EC) No 1272/2008 of the European Parliament and of the Council of 16 December 2008 on classification, labelling and packaging of substances and mixtures (as amended).

Guidance Workplace Exposure Limits EH40.
Safety Data Sheets for Substances and Preparations.

15.2. Chemical safety assessment

No chemical safety assessment has been carried out.

Inventories

Canada - DSL/NDSL
All the ingredients are listed or exempt.

US - TSCA
All the ingredients are listed or exempt.

Australia - AICS
All the ingredients are listed or exempt.

Korea - KECI
All the ingredients are listed or exempt.

China - IECSC
All the ingredients are listed or exempt.

Philippines – PICCS
All the ingredients are listed or exempt.

New Zealand - NZIOC
All the ingredients are listed or exempt.

SECTION 16: Other information

Revision comments	NOTE: Lines within the margin indicate significant changes from the previous revision.
Revision date	11/11/2015
Revision	1
SDS number	21580
Hazard statements in full	H304 May be fatal if swallowed and enters airways.

2. Liquimatic Super ATF

SAFETY DATA SHEET
Liquimatic Super ATF

SECTION 1: Identification of the substance/mixture and of the company/undertaking

1.1. Product identifier

Product name	Liquimatic Super ATF
Product number	7290
Internal identification	GHS21439
REACH registration number	n/a Mixture

1.2. Relevant identified uses of the substance or mixture and uses advised against

Identified uses	Transmission fluid
Uses advised against	Non specified unless otherwise stated within this MSDS

1.3. Details of the supplier of the safety data sheet

Supplier	Morris Lubricants Castle Foregate Shrewsbury SY1 2EL 08.45 - 17.00 GMT T: (+44)(0)1743 232200 F: (+44)(0)1743 353584 sds@morris-lubricants.co.uk

1.4. Emergency telephone number

Emergency telephone	+44 (0)1743 232200 (08.45 - 17.00 hrs GMT)

SECTION 2: Hazards identification

2.1. Classification of the substance or mixture

Classification

Physical hazards	Not Classified
Health hazards	Not Classified
Environmental hazards	Not Classified
Classification (67/548/EEC or 1999/45/EC)	Not Classified

2.2. Label elements

Hazard statements	NC Not Classified
Supplemental label Information	EUH210 Safety data sheet available on request.

Contains Distillates (petroleum), solvent-dewaxed heavy paraffinic

2.3. Other hazards

This product does not contain any substances classified as PBT or vPvB.

SECTION 3: Composition/information on ingredients

3.2. Mixtures

Distillates (petroleum) solvent-dewaxed heavy paraffinic			60-100%
CAS-No.: 64742-65-0	EC No.: 265-169-7	REACH registration number: 01-2119471299-27-XXXX	
Classification Asp. Tox. 1 - H304	Classification (67/548/EEC or 1999/45/EC) -		

Lubricating oil (petroleum) C20-C50,hydrotreated,neutral oil based			10-30%
CAS number: 72623-87-1	EC number: 276-738-4	REACH registration number: 01-2119474889-13-0000	
Classification Asp. Tox. 1 - H304	Classification (67/548/EEC or 1999/45/EC) -		

Methacrylate copolymer CAS number: —	1-5%
Classification Eye Irrit. 2 - H319	

The Full Text for all R-Phrases and Hazard Statements are Displayed in Section 16.

Composition comments If REACH registration numbers do not appear the substance is either exempt from registration, does not meet the minimum volume threshold for registration, the registration date has not yet come due or this information is proprietary.

SECTION 4: First aid measures

4.1. Description of first aid measures

General information Get medical attention if any discomfort continues.

Inhalation If spray/mist has been inhaled, proceed as follows. Move affected person to fresh air and keep warm and at rest in a position comfortable for breathing. Get medical attention if any discomfort continues.

Ingestion Get medical attention if any discomfort continues. Do not induce vomiting.

Skin contact Remove contaminated clothing immediately and wash skin with soap and water.

Eye contact Rinse immediately with plenty of water. Remove any contact lenses and open eyelids wide apart. Continue to rinse for at least 15 minutes. Get medical attention promptly if symptoms occur after washing.

4.2. Most important symptoms and effects, both acute and delayed

General information If aspiration into the lungs is suspected, eg when vomitting, admit to hospital immediately.

Inhalation Upper respiratory irritation.

Ingestion May cause discomfort if swallowed. The product contains mineral oil, which if aspirated into the lungs through vomitting after ingestion, may result in chemical pneumonia.

Skin contact Prolonged contact may cause redness, irritation and dry skin.

Eye contact Irritation of eyes and mucous membranes.

4.3. Indication of any immediate medical attention and special treatment needed

Notes for the doctor Treat symptomatically.

SECTION 5: Firefighting measures

5.1. Extinguishing media

Suitable extinguishing media Extinguish with foam, carbon dioxide, dry powder or water fog.

Unsuitable extinguishing Media Do not use water jet as an extinguisher, as this will spread the fire.

5.2. Special hazards arising from the substance or mixture

Specific hazards Heat from fire could result in drums bursting

Hazardous combustion products Protection against nuisance dust must be used when the airborne concentration exceeds 10 mg/m3. Oxides of carbon. Oxides of nitrogen. Fire may also create other unidentified organic gases some of which may be toxic.

5.3. Advice for firefighters

Protective actions during firefighting Control run-off water by containing and keeping it out of sewers and watercourses.

Special protective equipment for firefighters Wear self-contained breathing apparatus.

SECTION 6: Accidental release measures

6.1. Personal precautions, protective equipment and emergency procedures

Personal precautions For personal protection, see Section 8. In case of spills, beware of slippery floors and surfaces.

6.2. Environmental precautions

Environmental precautions Contain spillage with sand or earth. Avoid the spillage or runoff entering drains, sewers or watercourses. The product is insoluble in water and will spread on the water surface.

6.3. Methods and material for containment and cleaning up

Methods for cleaning up Contain spillage with sand or earth. Collect spillage for reclamation or disposal in sealed containers via a licensed waste contractor. Avoid water contacting spilled material or leaking containers. Spillages or uncontrolled discharges into watercourses must be reported immediately to the Environmental Agency or other appropriate regulatory body. In case of spillage on water prevent the spread by use of suitable barrier equipment

6.4. Reference to other sections

Reference to other sections For personal protection, see Section 8. See Section 11 for additional information on health hazards. For waste disposal, see section 13.

SECTION 7: Handling and storage

7.1. Precautions for safe handling

Usage precautions Avoid spilling. Always remove oil with soap and water or skin cleaning agent, never use organic solvents. Do not use oil-contaminated clothing or shoes, and do not put rags moistened with oil into pockets.

7.2. Conditions for safe storage, including any incompatibilities

Storage precautions Store in tightly-closed, original container in a dry, cool and well-ventilated place.

Storage class Miscellaneous hazardous material storage.

7.3. Specific end use(s)

Specific end use(s) The identified uses for this product are detailed in Section 1.2.

SECTION 8: Exposure Controls/personal protection

8.1. Control parameters

Occupational exposure limits
Distillates (petroleum), solvent-dewaxed heavy paraffinic

Long-term exposure limit (8-hour TWA): ACGIH 5 mg/m³
Short-term exposure limit (15-minute): ACGIH 10 mg/m³

Lubricating oil (petroleum) C20-C50,hydrotreated,neutral oil based

Long-term exposure limit (8-hour TWA): ACGIH 5 mg/m³
Short-term exposure limit (15-minute): ACGIH 10 mg/m³

Distillates (petroleum), hydrotreated light naphthenic

Long-term exposure limit (8-hour TWA): ACGIH 5 mg/m³

ACGIH = American Conference of Governmental Industrial Hygienists.

Distillates (petroleum), solvent-dewaxed heavy paraffinic (CAS: 64742-65-0)

DNEL	- Inhalation; : 5.4 mg/m³
PNEC	- ; 9.33 mg/kg

8.2. Exposure controls

Protective equipment

Appropriate engineering Controls	Provide adequate general and local exhaust ventilation. Observe any occupational exposure limits for the product or ingredients.
Eye/face protection	Eyewear complying with an approved standard should be worn if a risk assessment indicates eye contact is possible. The following protection should be worn: Chemical splash goggles or face shield.
Hand protection	The most suitable glove should be chosen in consultation with the glove supplier/manufacturer, who can provide information about the breakthrough time of the glove material.
Other skin and body Protection	Use barrier creams to prevent skin contact.
Hygiene measures	Use engineering controls to reduce air contamination to permissible exposure level. Wash
Respiratory protection	No specific recommendations. Respiratory protection must be used if the airborne contamination exceeds the recommended occupational exposure limit.
Thermal hazards	Not anticipated under normal conditions of use. The product is combustible if heated excessively and an ignition source is applied.
Environmental exposure Controls	Do not allow product to contaminate land.

SECTION 9: Physical and Chemical Properties

9.1. Information on basic physical and chemical properties

Appearance	Liquid.
Colour	Red.
Odour	Characteristic. Oil-like.
Odour threshold	Not known.

pH	Not applicable.
Melting point	-40°C Pour point
Initial boiling point and range	>320°C @ 101.3 kPa
Flash point	196°C PMCC (Pensky-Martens closed cup).
Evaporation rate	Not relevant.
Upper/lower flammability or explosive limits	Not known.
Other flammability	Product is not flammable but on excessive heating may become combustible.
Vapour pressure	<0.1 kPa @ 20°C
Vapour density	Not determined.
Relative density	0.864 @ 15.6°C
Solubility(ies)	Insoluble in water. Soluble in the following materials: Organic solvents.
Partition coefficient	Not determined. log Kow: > 7 The above figure is typical of mineral oil.
Auto-ignition temperature	No specific test data are available.
Decomposition Temperature	Not determined.
Viscosity	34.6 cSt @ 40°C
Explosive properties	Not considered to be explosive.
Explosive under the influence of a flame	Not considered to be explosive.
Oxidising properties	The mixture itself has not been tested but none of the ingredient substances meet the criteria for classification as oxidising.

9.2. Other information

Volatile organic compound	The product is a complex mixture, the majority of which would not be classed as a VOC. However it cannot be discounted that trace or low levels of VOC's may be present.

SECTION 10: Stability and reactivity

10.1. Reactivity

Reactivity	There are no known reactivity hazards associated with this product.

10.2. Chemical stability

Stability	Stable at normal ambient temperatures and when used as recommended.

10.3. Possibility of hazardous reactions

Possibility of hazardous reactions	Unlikely to occur under normal conditions of use. Unlikely to occur.

10.4. Conditions to avoid

Conditions to avoid	Avoid heat, flames and other sources of ignition.

10.5. Incompatible materials

Materials to avoid	Strong oxidising agents.

10.6. Hazardous decomposition products

Hazardous decomposition Products	Oxides of carbon. Protection against nuisance dust must be used when the airborne concentration exceeds 10 mg/m3.

SECTION 11: Toxicological information

11.1. Information on toxicological effects

Acute toxicity - oral

Acute toxicity oral (LD_{50} mg/kg)	2,000.0
Species	Rat
Notes (oral LD_{50})	Not expected to be highly toxic based on information of ingredients. Based on available data the classification criteria are not met.

Acute toxicity - dermal

Acute toxicity dermal (LD_{50} mg/kg)	2,000.0
Species	Rabbit
Notes (dermal LD_{50})	Not expected to be highly toxic based on information of ingredients. Based on available data the classification criteria are not met.

Acute toxicity - inhalation

Notes (inhalation LC_{50})	Not determined. The product is unlikely to present any significant inhalation hazard at ambient temperatures and under normal conditions of use.

Serious eye damage/irritation

Serious eye damage/irritation	May cause mild, short lasting discomfort to eyes.

Respiratory sensitisation

Respiratory sensitisation	No evidence to suggest the product will be a respiratory sensitiser. Repeated exposure to oil mists may cause respiratory damage.

Skin sensitisation

Skin sensitisation	Not expected to be a skin sensitizer based on information on components.

Carcinogenicity

Carcinogenicity	This product contains mineral oils which are considered to be severly refined and not considered to be carcinogenic under IARC. All of the oils in this product have been demonstrated to contain less than 3% extractables by the IP346 test

Reproductive toxicity

Reproductive toxicity - fertility	No data available to suggest the product will cause reproductive toxicity.

Specific target organ toxicity - single exposure

STOT - single exposure	Based on available data the classification criteria are not met.

Specific target organ toxicity - repeated exposure

STOT - repeated exposure	Based on available data the classification criteria are not met.

Aspiration hazard

Aspiration hazard	Kinematic viscosity > 20.5 mm^2/s. The product viscosity is greater than the upper limit assigned for classification. The product contains mineral oil. If aspirated into the lungs e.g. through vomitting after ingestion admit to hospital immediately.
General information	This product has low toxicity. Only large quantities are likely to have adverse effects on human health.
Inhalation	Unlikely to be hazardous by inhalation because of the low vapour pressure of the product at ambient temperature.
Ingestion	No harmful effects expected from quantities likely to be ingested by accident.
Skin contact	Skin irritation should not occur when used as recommended. Repeated exposure may cause skin dryness or cracking.
Eye contact	May cause temporary eye irritation.
Acute and chronic health hazards	Prolonged or repeated contact with used oil may cause serious skin diseases, such as dermatitis and skin cancer.

SECTION 12: Ecological Information

Ecotoxicity Based on available data the classification criteria are not met. Not regarded as dangerous for the environment.

12.1. Toxicity

Toxicity Based on available data the classification criteria are not met. Not considered toxic to fish.

Acute toxicity – aquatic Invertebrates Based on available data the classification criteria are not met.

12.2. Persistence and degradability

Persistence and degradability The product contains mineral oil which has limited biodegradability in CEC test methods but will biodegrade slowly in aerobic water and sediments and is considered ultimately biodegradable. The product is not readily biodegradable.

Stability (hydrolysis) The product is based on highly refined mineral oils that are considered stable to hydrolysis.

Biodegradation The product is not considered readily biodegradeable, albeit the major constituents are expected to ultimately biodegrade.

Biological oxygen demand Not determined.

Chemical oxygen demand Not determined.

12.3. Bioaccumulative potential

Bioaccumulative potential Bioaccumulation is unlikely to be significant because of the low water-solubility of this product.

Partition coefficient Not determined. log Kow: > 7 The above figure is typical of mineral oil.

12.4. Mobility in soil

Mobility The product is non-volatile. The product is insoluble in water and will spread on the water surface.

Henry's law constant Not determined.

12.5. Results of PBT and vPvB assessment

Results of PBT and vPvB Assessment This product does not contain any substances classified as PBT or vPvB.

12.6. Other adverse effects

Other adverse effects None known.

SECTION 13: Disposal considerations

13.1. Waste treatment methods

General information Waste should be treated as controlled waste. Dispose of waste to licensed waste disposal site in accordance with the requirements of the local Waste Disposal Authority.

Disposal methods Dispose of waste to licensed waste disposal site in accordance with the requirements of the local Waste Disposal Authority.

Waste class European Waste Catalogue = 13 03 10*

SECTION 14: Transport information

General The product is not covered by international regulations on the transport of dangerous goods (IMDG, IATA, ADR/RID).

14.1. UN number

Not applicable.

14.2. UN proper shipping name

Not applicable.

14.3. Transport hazard class(es)

No transport warning sign required.

14.4. Packing group

Not applicable.

14.5. Environmental hazards

Environmentally hazardous substance/marine pollutant

14.6. Special precautions for user

Not applicable.

14.7. Transport in bulk according to Annex II of MARPOL73/78 and the IBC Code

Transport in bulk according to Annex II of MARPOL 73/78 and the IBC Code	Not applicable.

SECTION 15: Regulatory information

15.1. Safety, health and environmental regulations/legislation specific for the substance or mixture

National regulations	Health and Safety at Work etc. Act 1974 (as amended). The Pollution Prevention and Control Act 1999. Special Waste regulations 1996. Control of Pollution (Oil Storage) (England) Regulations 2001 The Chemicals (Hazard Information and Packaging for Supply) Regulations 2009 (SI 2009 No. 716).
EU legislation	Dangerous Preparations Directive 1999/45/EC. Dangerous Substances Directive 67/548/EEC. Regulation (EC) No 1907/2006 of the European Parliament and of the Council of 18 December 2006 concerning the Registration, Evaluation, Authorisation and Restriction of Chemicals (REACH) (as amended). Regulation (EC) No 1272/2008 of the European Parliament and of the Council of 16 December 2008 on classification, labelling and packaging of substances and mixtures (as amended).
Guidance	Workplace Exposure Limits EH40. Safety Data Sheets for Substances and Preparations.

15.2. Chemical safety assessment

No chemical safety assessment has been carried out.

Inventories

Canada - DSL/NDSL
All the ingredients are listed or exempt.

US - TSCA
All the ingredients are listed or exempt.

Australia - AICS
All the ingredients are listed or exempt.

Korea - KECI
All the ingredients are listed or exempt.

China - IECSC
All the ingredients are listed or exempt.

Philippines – PICCS
All the ingredients are listed or exempt.

New Zealand - NZIOC
All the ingredients are listed or exempt.

SECTION 16: Other information

Revision comments	NOTE: Lines within the margin indicate significant changes from the previous revision.
Issued by	Regulatory Affairs
Revision date	26/10/2015
Revision	2
SDS number	21439
Hazard statements in full	H304 May be fatal if swallowed and enters airways. H319 Causes serious eye irritation.

SERVICE RECORD CARD

Model: ……

Engine No: ……..

Carried out by Thornycroft **Print Name:** PDI **Actual Hours:** **Signed:**	**Boat Builder Stamp:** **Commission of Boat and Hand Over to Customer. (Refer to the Installation Check List Page in this Manual).** **Date:** **Signed:**
Dealer Stamp: 1st **Actual Hours:** **Signed:**	**Dealer Stamp:** 2nd **Actual Hours:** **Signed:**
Dealer Stamp: 3rd **Actual Hours:** **Signed:**	**Dealer Stamp:** 4th **Actual Hours:** **Signed:**
Dealer Stamp: 5th **Actual Hours:** **Signed:**	**Dealer Stamp:** 6th **Actual Hours:** **Signed:**

Please refer to Owner's Manual for service intervals