ORIGINAL PARTS BOOK

SHIRE PARTS BOOK

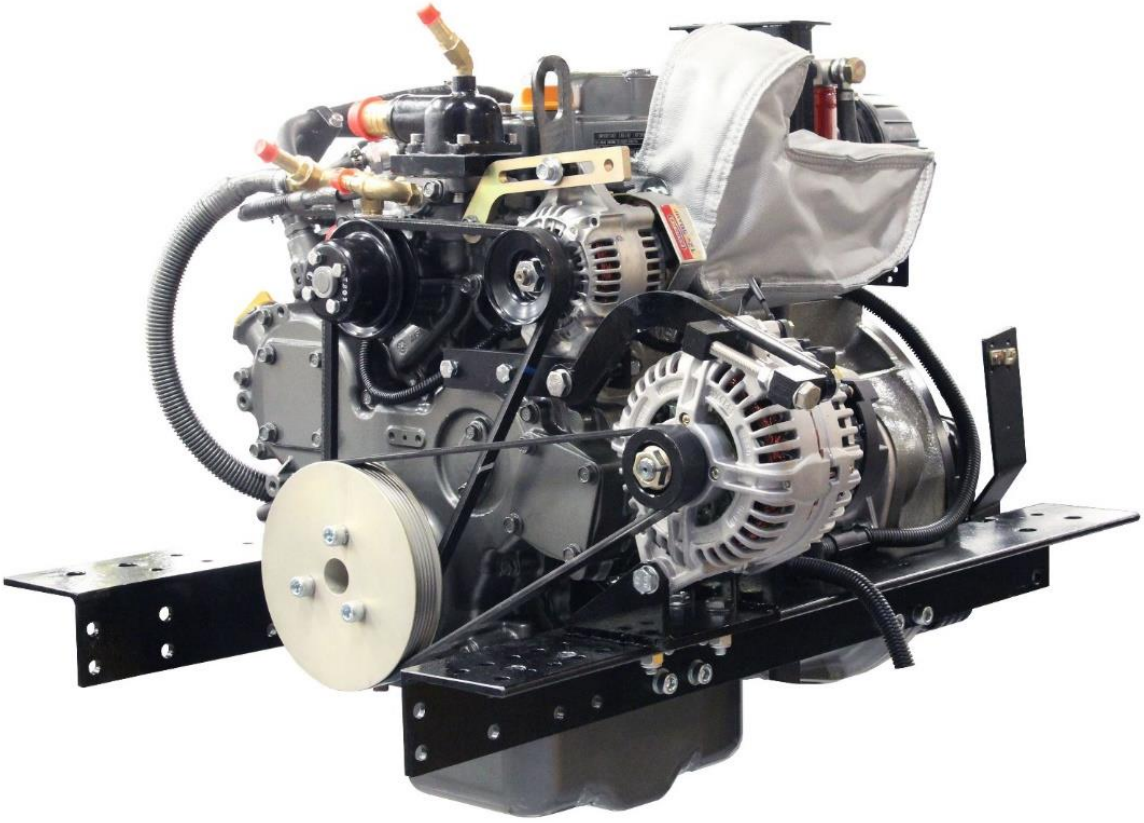

For the following engine models*:

Shire 05 35
Shire 06 35
Shire 11 35
Shire 12 35
Shire 14 35
Shire 35

*Standard Model, there may be a number of optional extras that may be fitted to an engine that are not shown in this book

RDG603A36 - Issue 8 - Issued 22/11/2019

Index

Page

Base Engine Model 3
Service Parts 4
Consumables 6
Control Panel Parts 7
Electrical Parts 9
Gearbox Parts 12
Pumps 14
Thermostat Parts 15
Header Tank Parts 16
Travel Power Parts 17
Engine Mount Parts 18
Exhaust Manifold Blankets 19
Engine Parts: Injectors 20
Engine Parts: Fuel Injection Pump 21
Engine Parts: Rocker Cover Gasket & Oil Cap 22
Engine Parts: Cylinder Head Gasket 23
Accessories: Sterngear 24
Accessories: Propellers 25
Accessories: Lever Controller 26
Dealer List 27

Base Engine Model

Shire Model	Base Engine
Shire 05 35	3TNV82A-DSA
Shire 06 35	3TNV82A-DSA
Shire 11 35	3TNV82A-DSA
Shire 12 35	3TNV82A-BDSA
Shire 14 35	3TNV82A-BDSA
Shire 35	3TNV82A-BDSA

Service Parts

	Description	Part No.	Model
	Primary Fuel Filter	RDG2238	Shire 05 35 Shire 06 35 Shire 11 35
	Primary Fuel Filter	RDG9188346	Shire 12 35 Shire 14 35 Shire 35
	Secondary Fuel Filter	119802-55810	All
	Air Filter Element	RDG5795	All (up to Serial No xx-02662)
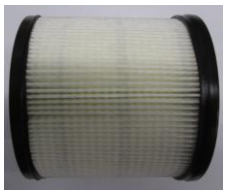	Air Filter Element	RDG919A19	Shire 35 (from Serial No xx-02663)
	Oil Filter	129150-35170	All
	Fuel Filter Drain Screw	RDG9189022	Shire 12 35 Shire 14 35 Shire 35
	50A Alternator Belt	RDG6079	Shire 05 35 Shire 06 35 Shire 11 35

	50A Alternator Belt	25132-003700E	Shire 12 35 Shire 14 35 Shire 35
	110A Alternator Belt	RDG5757	Shire 05 35 Shire 06 35 Shire 11 35 (Serial No 000001 to 061081)
	110A Alternator Belt	RDG2254	Shire 06 35 Shire 11 35 (Serial No 061082 onwards)
	125A Alternator Belt	RDG0047511	Shire 35 (from Serial No xx-02663)
	140A Alternator Belt	RDG6076	Shire 12 35 Shire 14 35
	150A Alternator Belt	RDG6076	Shire 35 (up to Serial No xx-02662)
	240A Alternator Belt	RDG0047498	Shire 35

Consumables

	Description	Part No.	Model
	Engine Oil 10W40 CD 5L Container (This can also be used for a PRM 150 and PRM 280 Gearbox) NOTE: This part number supersedes RDG2797	RDG6110	All
	Diesel Fuel Additive 500ml Container	RDG80210219	All

Control Panel Parts

*** The Shire 05 35, Shire 06 35 and Shire 11 35 used a different type of panel which is no longer available. If the Control Panel or any of the parts on it require replacement the newer Standard/Deluxe Control Panel would be required.**

	Description	Part No.	Model
	Standard Control Panel	RDG20710110	All*
	Deluxe Control Panel	RDG20710111	All*
	Ignition Switch	RDG215A5	All
No Image	Ignition Switch Kit (to replace ignition switches fitted before 2016)	RDG215A6	All
	Tacho Gauge	RDG20710158	All
	Oil Pressure Gauge	RDG21710160	All
	Voltmeter Gauge	RDG21710161	All
	Water Temperature Gauge	RDG21710159	All

	Control Panel Warning Light	RDG20910163	All

Electrical Parts

	Description	Part No.	Model
	Extension Loom (2.3m)	RDG4041	All
	50A Alternator	AND0286	All
	70A Alternator	RDG5682	Shire 05 35 Shire 06 35
	125A Alternator	128990-77250	Shire 35 (from Serial No xx-02663)
	150A Alternator (110A / 140A Alternators originally supplied are no longer available)	RDG20110201	All (up to Serial No xx-02662)
	240A Alternator	RDG2019682	Shire 35
	Starter Motor	SHI0081	All
	Stop Solenoid	119653-77950	All

	Electric Fuel Pump	RDG504A90	Shire 11 35 Shire 12 35 Shire 14 35 Shire 35
	Water Temperature Switch	121250-44901	All
	Water Temperature Sender and Switch (only if Deluxe Panel is fitted)	RDG2189446	All
	Oil Pressure Switch / Sensor (only if Deluxe Panel is fitted)	RDG2189445	All
	Engine Stop Control System Fuse (40 Amp)	RDG3246	All
	Control Panel Supply Fuse (15 Amp)	RDG3245	All
	Engine Start Control System Fuse (15 Amp)	RDG3245	All
	Glow Plug Fuse (40 Amp)	RDG3246	All
	Starter Relay	RDG1396	All

	Cold Start Relay	RDG5279	Shire 14 35* Shire 35

* If applicable

Gearbox Parts

	Description	Part No.	Model
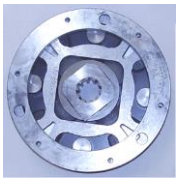	Damper Plate for Shire 150 D2	RDG6231	Shire 06 35 Shire 11 35
	Damper Plate for PRM 150 D2	RDG1766	Shire 05 35 Shire 12 35 Shire 14 35 Shire 35
	PRM 150 D2 Gearbox (Unless the optional D3 3:1 Ratio gearbox has been fitted)	RDG1765	All
	Gearbox Oil Cooler (This replaces ALL previous oil coolers fitted on engines)	RDG909A19	Shire 05 35* Shire 06 35* Shire 11 35* Shire 12 35* Shire 14 35* Shire 35
	Gearbox Oil Cooler Hose (Long)	RDG5690	All
	Gearbox Oil Cooler Hose (Short)	RDG5295	All
	Gearbox Oil Cooler Water Hose	RDG1883	Shire 11 35 Shire 12 35 Shire 14 35 Shire 35
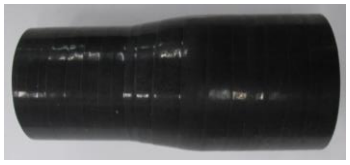	Gearbox Oil Cooler Water Hose Reducer 35-28mm	RDG3018381	All

*** Modifications may be required for the Oil Cooler to fit which include using**

RDG3018381 (Gearbox Oil Cooler Water Hose Reducers 35-28mm).

Pumps

	Description	Part No.	Model
	Sump Pump ¾”	RDG2837	All

Thermostat Parts

	Description	Part No.	Model
	Thermostat (82°)	RDG909A7	All
	Thermostat Gasket	129795-49551	Shire 05 35 Shire 06 35 Shire 11 35
	Thermostat Gasket	129350-49541	Shire 12 35 Shire 14 35 Shire 35

Header Tank Parts

*** The Shire 05 35 used a different type of Header Tank which is no longer available. If the Header Tank or any of the parts which fit on it require replacement the newer Header Tank would be required.**

	Description	Part No.	Model
	Header Tank	RDG6364	All*
	Header Tank Cap	RDG1723	All
	Header Tank Hose	RDG3310	All

Travel Power Parts

	Description	Part No.	Model
	3.5kW Travel Power Alternator Belt	RDG6076	Shire 06 35 Shire 11 35
	3.5kW Travel Power Alternator Belt	RDG0047511	Shire 12 35 Shire 14 35 Shire 35
	5kW Travel Power Alternator Belt	RDG6076	Shire 06 35 Shire 11 35
	5kW Travel Power Alternator Belt	RDG0047511	Shire 12 35 Shire 14 35 Shire 35

Engine Mount Parts

	Description	Part No.	Model
	Rear Engine Mount	RDG3033	Shire 12 35 Shire 14 35 Shire 35
	Engine Mount Stud Kit (for RDG3033)	RDG1867	Shire 12 35 Shire 14 35 Shire 35
	Front Engine Mount & Height Adjuster Kit	RDG5833	All

Exhaust Manifold Blankets

Description	Part No.	Model
Exhaust Blanket	RDG2478	All

Engine Parts: Injectors

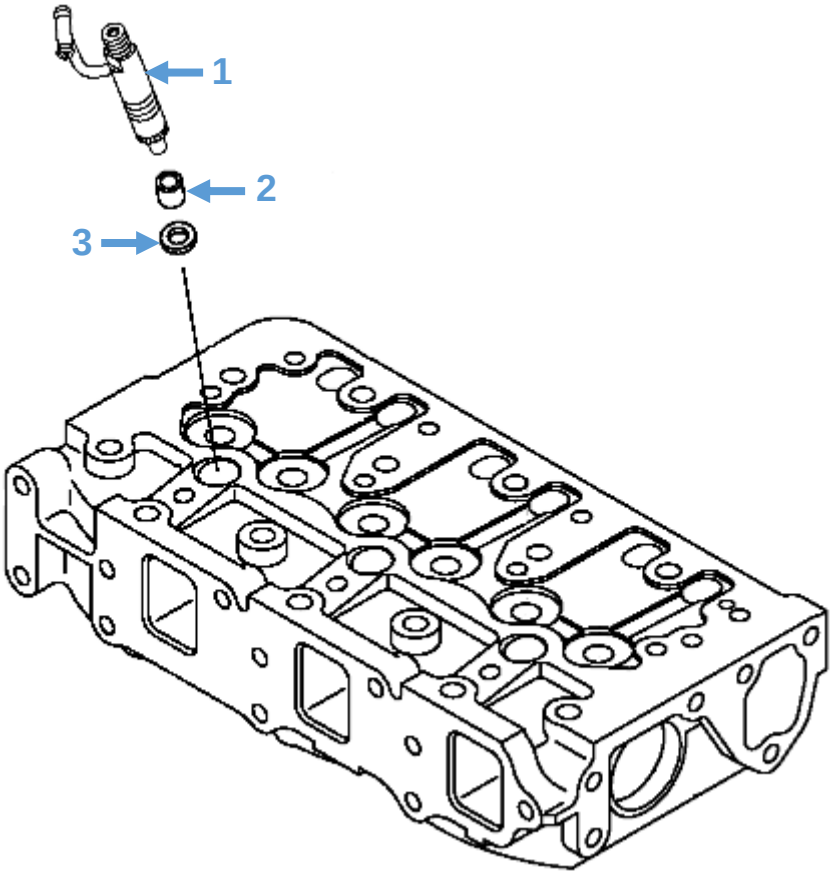

Diagram No.	Description	Part No.	Model
1	Injector	719802-53101	Shire 05 35 Shire 06 35 Shire 11 35
		729008-53100	Shire 12 35 Shire 14 35 Shire 35
2	Injector Protector	119802-11870	All
3	Injector Seat	119625-11880	All

Engine Parts: Fuel Injection Pump

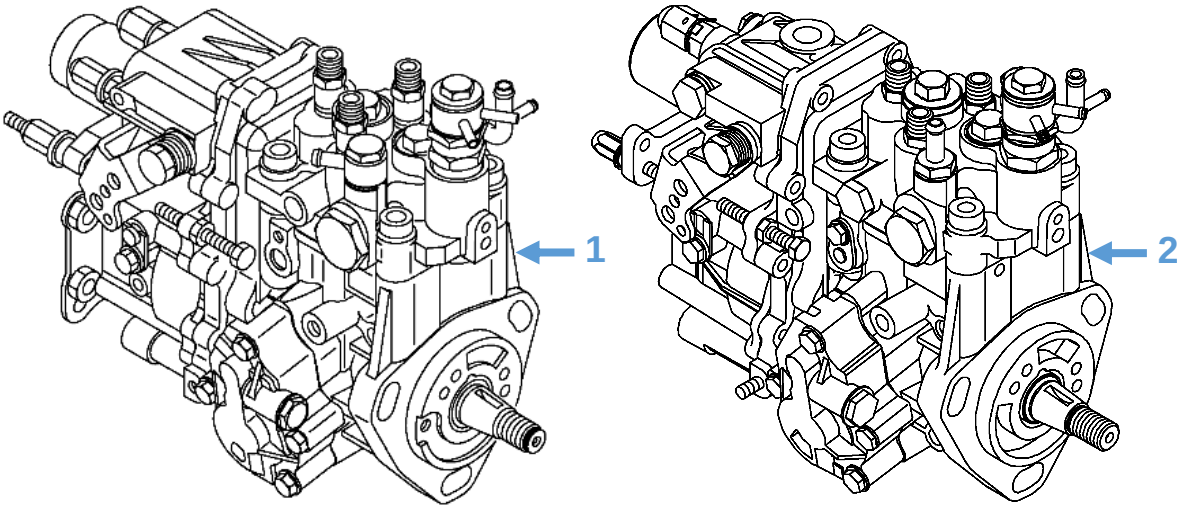

Diagram No.	Description	Part No.	Model
1	Fuel Injection Pump	719802-51310	Shire 05 35 Shire 06 35 Shire 11 35
2	Fuel Injection Pump	719933-51301	Shire 12 35 Shire 14 35 Shire 35

Engine Parts: Rocker Cover Gasket & Oil Cap

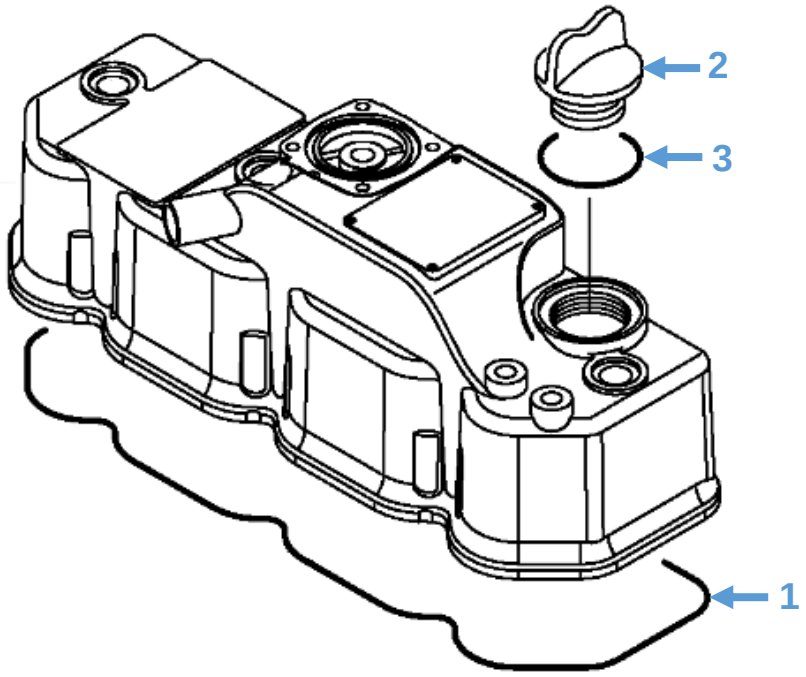

Diagram No.	Description	Part No.	Model
1	Rocker Cover Gasket	119802-11310	All
2	Oil Cap	124160-01751	All
3	Oil Cap O-Ring	24311-000320	All

Engine Parts: Cylinder Head Gasket

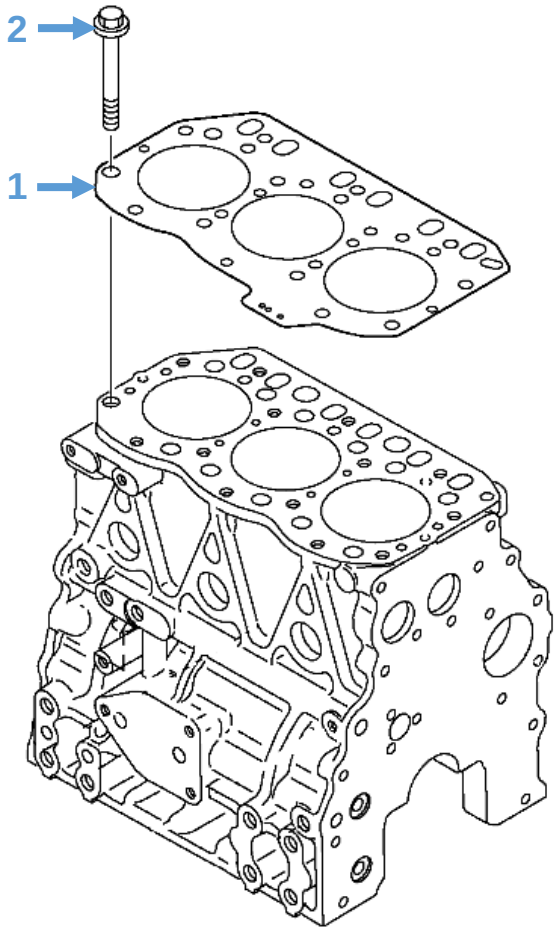

Diagram No.	Description	Part No.	Model
1	Cylinder Head Gasket	119812-01330	All
2	Cylinder Head Bolt	119810-01200	All

Accessories: Sterngear

	Description	Part No.	Model
	30” x 1.5” Diameter Propeller Shaft	EPB3841	All
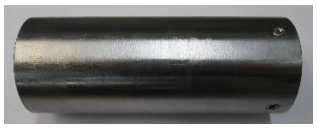	Weldable Sterntube	EPB5534	All
No Image	Flexible Shaft Seal (to suit 1.5” shaft)	EPB5536	All

Accessories: Propellers

Description	Part No.	Model
16” x 9” 3 Blade Propeller	16X93PB	All*

***Suitable for a 1.5” Shaft, 12:1 Taper**

Accessories: Lever Controller

	Description	Part No.	Model
	Single Lever Control Unit (side mounted)	RDG92010055	All
	3 Metre Cable	RDG92010056	All

Dealer List

Area	Company	Telephone	Email
BERKSHIRE	Bluenine Marine	01189 406482	info@blueninemarine.co.uk
	Driveline Marine	0118 942 3877	tam@drivelinemarine.com
	Marcus Marine Engineering Ltd (Servicing, Repairs & Breakdowns only)	07900890911	Marcus@marcusmarine.co.uk
BRISTOL	Advance Marine	01275 815910	phil@advancemarine.co.uk
CHESHIRE	Midland Chandlers	01928 751 800	preston.brook@midlandchandlers.co.uk
	Nantwich Canal Centre Ltd	01270 625122	info@nantwichcc.com
CUMBRIA	Windermere Aquatic Ltd	01539 442121	service@aquaticboatcentres.com
DERBYSHIRE	Midland Chandlers	01283 701445	willington@midlandchandlers.co.uk
DEVON	Sleeman & Hawken Ltd	01626 778266	sales@sleeman-hawken.co.uk
ESSEX	French Marine Motors Ltd	01206 305233 01255 850303	info@frenchmarine.com
HAMPSHIRE	Marine Power Ltd	0238 0403918	sales@marine-power.co.uk
HERTFORDSHIRE	Lee Valley Marina	01920 870499 01920 293101	stansteadmarina@vibrantpartnerships.co.uk
	Keypart Ltd	01923 276000	sales@keypart.com
LEICESTERSHIRE	Foxton Boat Services Ltd	01162 792285	foxtonboats@btinternet.com
LONDON	Lee Valley Marina	020 88061717	springfieldmarina@vibrantpartnerships.co.uk
MIDDLESEX	Lindon Lewis Marine	01932 247427	service@pushtheboatout.com
NORTHAMPTON	Grand Junction Boat Co.	01604 858043	info@boatrepairs.uk.com
	Midland Chandlers	01788 891401	braunston@midlandchandlers.co.uk
NOTTINGHAM	Farndon Marina	01636 705483	info@farndonmarina.co.uk
STAFFORDSHIRE	JD Boat Services Ltd	01902 791811	david@jdboats.co.uk
	Midland Chandlers	01785 712437	penkridge@midlandchandlers.co.uk
	Stone Boatbuilding Company	01785 812688	stonechandlery@aol.com
	Streethay Wharf	01543 414808	office@streethaywharf.co.uk
WARWICKSHIRE	Springwood Haven Leisure Ltd	0845 4566572	enquiries@springwoodhaven.co.uk
WILTSHIRE	Devizes Marina	01380 725300	sales@devizesmarina.com

WORCESTERSHIRE	Crafted Boats Ltd	01527 876438	craftedboats@btconnect.com
	Evesham Marina	01386 768500	info@eveshammarina.co.uk
YORKSHIRE	Rodley Boat Centre	01132 576132	rodleyboatcentre@msn.com
MONMOUTHSHIRE	Castle Narrowboats	01873 830001	info@castle.narrowboats.co.uk
EIRE	Southshore Marina & Diesel Ltd	028383 41010	info@southshoremarine.co.uk