ORIGINAL INSTRUCTION

SHIRE WORK BOAT ENGINE MANUAL

For the following engine models:

SHIRE 70 WB

SHIRE 85 WB

SAFETY

E.P. Barrus is concerned for your safety. We use safety statements throughout the manual to call your attention to the potential hazards associated with the operation of your Shire engine.

Follow the precautions listed throughout the manual before operation, during operation and during servicing/maintenance procedures for your safety, the safety of others and to protect the performance of your engine.

Safety alert symbol appears throughout the manual. It means attention, be alert as your safety is involved. Please read and follow the message that appears after the safety alert symbol.

NOTICE:	This indicates a situation which can cause damage to the machine, personal property and/or the environment or cause the equipment to operate improperly
CAUTION:	This indicates a hazardous situation which, if not avoided, could result in minor or moderate injury.
WARNING:	This indicates a hazardous situation which, if not avoided, could result in death or serious injury.
DANGER:	This indicates a hazardous situation which, if not avoided, will result in death or serious injury.

Engine Details

Engine Serial Number:	

Please enter your engine serial number in the space provided above. Please quote the engine identification number during any enquiry or when ordering spare parts. Information about the engine serial number and its location on the engine can be found in **SECTION 2** of the manual.

Shire Engine Manuals and Shire Parts Books

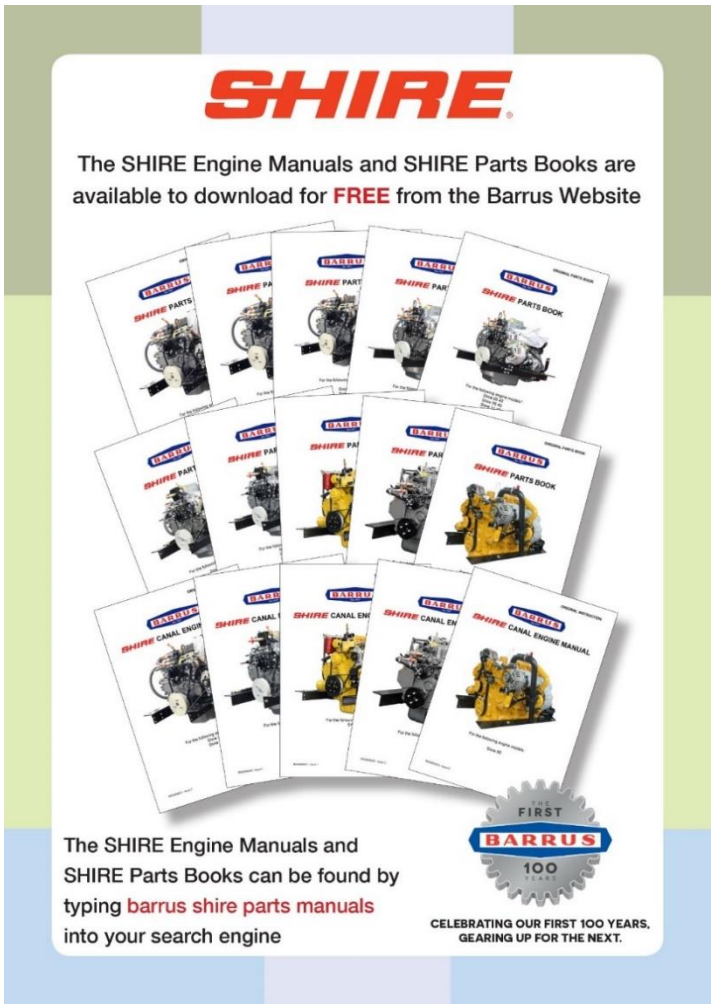

To access the Shire Engine Manuals and Shire Parts Books on the internet type the following short links into your search engine:

https://www.barrus.co.uk/shire-manuals/
https://www.barrus.co.uk/shire-parts/

NOTICE:

THIS MANUAL FORMS AN INTEGRAL PART OF THE ENGINE IT ACCOMPANIES, IF A TRANSFER OF TITLE OCCURS, IT MUST ALWAYS BE HANDED OVER TO THE NEW OWNER.

Thank you for purchasing this Shire Work Boat Engine from E.P.Barrus. This manual has been compiled to help you to operate your engine and its associated parts with safety and pleasure. Please read it carefully in conjunction with the Yanmar or John Deere and PRM Gearbox Manuals and familiarise yourself with the engine and its parts before operation. The PRM Gearbox Manual is available from the PRM website:

www.prm-newage.com

If the engine is fitted with an E-Kit and/or Hybrid options, please also read the supplied manuals for them carefully.

The information and recommendations given in this manual are based on the latest information available at the time of publication. E.P.Barrus reserve the right to change the specification of its products and manuals without prior notice.

Depending upon the equipment specification of the engine and accessories fitted, there may be discrepancies with the information presented in this handbook. No claims may be pursued in this respect.

WARRANTY

This UK Limited Warranty provides coverage for three (3) years (or 2000 hours whichever occurs first) for commercial users from the date of warranty registration. The warranty is for non-serviceable items. The repair or replacement of parts, or the performance of service under this warranty, does not extend the life of this warranty beyond its original expiry date.

To ensure that you have been registered for your warranty, please ask your Boat Builder or Engine Supplier to provide your portion of the registration form.

The Warranty will only apply if the following have been carried out:

1) The Installation Check List in the Installation Section has been fully completed.
2) The boat builder or engine installer has completed the Boat Builder Section on the Service Record Card (located at the back of this manual) regarding hand over and commissioning of boat.

E.P Barrus staff or their representatives can only carry out warranty repairs if there is suitable access and room around the engine to work safely.

Failure to complete and return the registration form to E.P Barrus will result in the warranty period starting from the date of engine manufacture <u>NOT</u> from the date of purchase.

PRM Gearboxes are covered by a two (2) year warranty.

Engine alternator, starter motor and electrical components are only covered by a one (1) year warranty.

CONDITIONS THAT MUST BE MET IN ORDER TO OBTAIN WARRANTY COVERAGE

Warranty coverage is only available from an authorised dealer in the country in which the sale occurred. Routine maintenance outlined in the Owner's Manual must be performed using genuine parts in order to maintain warranty coverage. If the customer performs maintenance, Barrus reserves the right to make future warranty coverage possible only with proof of proper maintenance.

WARRANTY CLAIMS

Warranty claims shall be made by an authorised dealer or boat builder.

The dealer or boat builder will then arrange for the inspection and any necessary repairs. If the repairs carried out are not covered by the warranty, the purchaser shall pay for all related labour and material, and any other expenses associated with that service.

WHAT IS NOT COVERED

This limited warranty does not cover routine maintenance items, adjustments, normal wear and tear, damage caused by abnormal use, operation of the product in a manner inconsistent with the recommended operation/duty cycle section of the Owner's Manual, accident, submersion, improper installation (proper installation specification and techniques are set forth in the Operations and First time running sections in this manual), use of an accessory or part not manufactured or sold by us, or alteration or removal of parts. Expenses related to crane-out, launch, towing, storage, telephone, rental, inconvenience, slip fees, insurance coverage, loan payments, loss of time, loss of income, or any other types of accidental or consequential damages are not covered by this warranty.

For the Shire 85WB failure to use John Deere approved oils and coolants will invalidate any warranty.

Engine electrical systems fitted with alternator boost charge systems or any other electrical management systems are not covered by warranty.

Engine and fuel equipment is not covered by warranty if bio-diesel is used in the fuel system. Also if no type of water trap is incorporated into the fuel system.

Index

Page

SECTION 1 – Safety Precautions 10

1. General 10
2. Lifting 10
3. Rotating Shafts and Belts 10
4. Exhaust System 11
5. Launching and Lifting Boats 11
6. Batteries 11

SECTION 2 – Engine Identification 13

SECTION 3 – Control Panel 14

1. Deluxe Control Panel 14
2. Control Panel Overview 14
3. Warning Light Procedure 14
4. Overall Dimensions of the Deluxe Control Panel 17

SECTION 4 – Installation 18

1. Ventilation 18
2. Engine Beds 18
3. Pressurised Water Header Tank 18
4. Shaft Connection and Propeller Selection 20
5. Engine Anti-Vibration Mounts 20
6. Engine Alignment 22
7. Engine Inclination 23
8. Electrics 24
9. Electrical Options 25
10. Engine Oil 25
11. Fuel 26
12. Coolant 27
13. Control Cables 28
14. Domestic Battery Bank (with optional Twin Alternator Engines) 28

15. Seawater Strainer 29
16. Control Panel 29
17. Calorifiers (Optional) 30
18. Installation Check List 32
SECTION 5 – Operation 33
1. Starting the engine for the first time 33
2. Starting Procedure 33
3. Stopping Procedure 34
4. Full Load Running 34
5. Refuelling 34
6. Diesel Fuel Additive 34
7. Exhaust Back Pressure (Work Boat with dry exhaust) 35
SECTION 6 – Service Procedure 36
1. Engine Oil and Filter Change 36
2. Air Filter Check and Change 37
3. Gearbox Oil Change 37
4. Disposal of Oil and Related Items 38
5. Primary Fuel Filter Drain 38
6. Primary Fuel Filter Change 39
7. Secondary Fuel Filter Change 40
8. Fuel System Bleeding 41
9. Cooling System 41
10. Belt Adjustment 42
11. Belt Maintenance 43
12. Belt Replacement 43
13. Control Panel Maintenance 45
SECTION 7 – Service Schedule 46
1. Specifications and Capacities 46
2. Service Intervals 47
SECTION 8 – Wiring Diagrams 48

1. Engine Wiring Diagram Shire 70 WB 48
2. Engine Wiring Diagram Shire 85 WB 49
3. Deluxe Control Panel Wiring Diagram 50
4. 8kW Travel Power Wiring Diagram and Overall Dimensions 51
5. 5kW Travel Power System....52

SECTION 9 – Dealer List 53

SECTION 10 – Shire Parts....55

SECTION 11 - Declarations 57

1. Declaration of Conformity for Recreational Craft Propulsion Engine with the requirements of Directive 94/25/EC. (SHIRE 70WB) 57
2. Declaration of Conformity for Recreational Craft Propulsion Engine with the requirements of Directive 94/25/EC. (SHIRE 85WB) 58

SECTION 12 – Shire Service Record Card....59

SECTION 1 – Safety Precautions

1. General

NOTICE:

NEVER PERMIT ANYONE TO OPERATE THE ENGINE WITHOUT PROPER TRAINING.

It is the responsibility of the installer/operator to ensure that the finished installation complies with the relevant Health & Safety requirements and the recreational craft directive before commissioning.

Ensure that the engine battery isolator switch is in the off position and the key removed from the control panel before carrying out any maintenance or repairs.

2. Lifting

DANGER:

CRUSH HAZARD! NEVER STAND UNDER A HOISTED ENGINE. IF THE HOIST MECHANISM FAILS, THE ENGINE WILL FALL ON YOU, CAUSING SERIOUS INJURY OR DEATH.

The Lifting points supplied with the engine are for lifting the engine/gearbox only. A suitable spreader bar must be employed to prevent over-stressing either bracket during any lift.

3. Rotating Shafts and Belts

WARNING:

SEVERE HAZARD! KEEP HANDS AND OTHER BODY PARTS AWAY FROM MOVING/ROTATING PARTS. WEAR TIGHT FITTING CLOTHING AND KEEP YOUR HAIR SHORT OR TIE BACK. REMOVE ALL JEWELLERY BEFORE COMMENCING WORK. CHECK BEFORE STARTING THE ENGINE THAT ANY TOOLS OR RAGS USED DURING MAINTENANCE HAVE BEEN REMOVED FROM THE AREA.

The engine and its accessories are not intended to be put into operation until they are integrated into the boat as a whole. No person should be in the engine compartment and the engine cover or deck hatches should be closed whilst the engine is running.

4. Exhaust System

WARNING:

EXHAUST HAZARD! NEVER OPERATE ENGINE IN A BOATS ENGINE BAY WITHOUT PROPER VENTILATION. NEVER BLOCK VENTS OR OTHER MEANS OF VENTILATION. ALL COMBUSTION ENGINES CREATE CARBON MONOXIDE GAS DURING OPERATION. ACCUMULATION OF THIS GAS COULD CAUSE ILLNESS OR EVEN DEATH.

WARNING:

BURN HAZARD! WAIT UNTIL THE EXHAUST COOLS BEFORE YOU TOUCH IT.

Exhaust gases may have temperatures as high as 650°C and contain elements which are harmful if ingested.
It is therefore essential that exhaust systems are gas tight and lagged to prevent accidental burning and inhalation of exhaust gases when inside the boat cabin.

5. Launching and Lifting Boats

Care must be taken when launching or craning new boats into or out of the waterway, so that water does not enter the engine via the exhaust system or air vents. It is recommended that these are blocked temporarily whilst undertaking this procedure.

6. Batteries

DANGER:

EXPLOSION HAZARD! NEVER SHORT OUT THE BATTERY TERMINALS, INCLUDING WHEN CHECKING THE REMAINING BATTERY CHARGE THIS WILL RESULT IN A SPARK AND MAY CAUSE AN EXPLOSION OR FIRE.

WARNING:

BURN HAZARD! BATTERIES CONTAIN SULPHURIC ACID. NEVER ALLOW BATTERY FLUID TO COME IN CONTACT WITH SKIN, EYES OR CLOTHING. SEVERE BURNS COULD RESULT. MAKE SURE THE CORRECT PERSONAL PROTECTION EQUIPMENT IS WORN.

- Batteries can produce explosive gases; keep sparks and flames away from the battery.

NO SMOKING

- Batteries contain sulphuric acid; if splashed on skin or eyes, flush well with water and seek medical advice.
- Keep battery tops and battery compartment ventilated at all times
- If disconnecting the battery; remove the earth lead **FIRST**; and re-connect it last.
- If charging the battery; ensure that the charger is switched off before connecting and disconnecting.
- Do not tip the battery on its side.
- Please see label on battery or manufacturer's instructions for specific information.

SECTION 2 – Engine Identification

The engine serial number can be found engraved into the brass plate on the top of the engine rocker cover and stamped to the crankcase next to the starter motor.

An example of the engine identification plate is shown below (**Figure 1**):

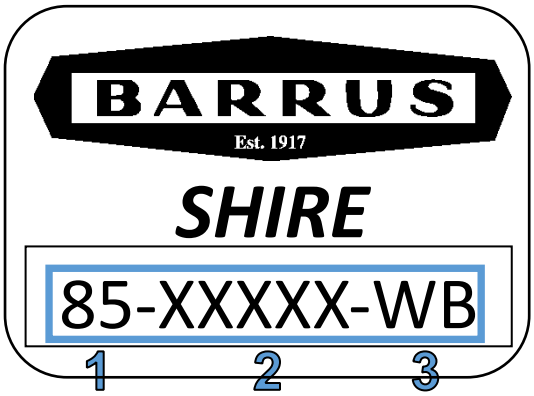

	Description
1	Engine Model
2	Serial Number
3	Indicates Model Type or Optional Extras: WB = Work Boat D = Deluxe Panel 3 = 3:1 Ratio Gearbox

Figure 1: Engine Identification Badge

***Note**: There are a number of optional extras that may be fitted to an engine that are not listed here.

A list of common item service part numbers can be found in **Section 10**, Shire Parts.

SECTION 3 – Control Panel

1. Deluxe Control Panel

Figure 2: Deluxe Control Panel

	Description
1	Tachometer Gauge
2	Hour Meter
3	Water Temperature Warning Light
4	Oil Pressure Warning Light
5	50A Alternator Charge Warning Light
6	150/240A Alternator Charge Warning Light
7	Glow Plug Light
8	Key Flap and Ignition Switch
9	50A Alternator Output Gauge
10	Oil Pressure Gauge
11	Water Temperature Gauge

2. Control Panel Overview

- All Shire engines are supplied with a control panel.
- Depending on the model of Shire engine, the control panel will either be a standard control panel or a deluxe control panel. The following table shows which panel comes with each type of engine as standard. Please note that on certain Shire engines a different type of control panel can be ordered as an option.

Engine	Control Panel Supplied*
Shire 70WB / Shire 85WB	Deluxe Control Panel

* Panel supplied as standard. On certain engines a different control panel may be supplied as an option

3. Warning Light Procedure

- When the ignition is first turned on, the control panel warning lights will come on as a bulb check. When the engine is started the warning lights will go out. Please note that the water temperature warning light and glow plug light operate slightly differently.

- The water temperature warning light will only come on for a brief period of time when the ignition is first turned on as a bulb check. It will then only illuminate in the case of the engine coolant temperature exceeding the maximum safety level.

- The glow plug light will come on when the ignition is first turned on for 5 – 8 seconds to indicate the heating system is operational. When the light goes out the engine can be started.

- Whilst the control panel is in operation all the gauges are backlit. This does not indicate a fault and is a normal function for the control panel.

- If any of the warning lights on the control panel come on **whilst** the engine is running, please follow the correct procedure as shown in the following table.

In the event of a fault, only trained and qualified personnel should undertake repairs on the engine

	Description	Procedure for Warning Light
1	Tachometer Gauge	-
2	Hour Meter	-
3	Water Temperature Warning Light	Reduce the engine revs and stop the engine within one or two minutes. Check the coolant level (refer to **9. Cooling System of SECTION 6 - SERVICE PROCEDURE**). If the coolant level is incorrect, fill it to the correct level (refer to **9. Cooling System of SECTION 6 - SERVICE PROCEDURE**) and restart the engine. If the coolant level is correct and the fault is still present, or there is a coolant leak, please contact your local dealer.
4	Oil Pressure Warning Light	Stop the engine immediately. Contact your local dealer. Failure to stop the engine may result in permanent engine damage.
5	50A Alternator Charge Warning Light	This indicates that the alternator has stopped charging. The engine can still be operated for a short period of time. Contact your local dealer.
6	150/240A Alternator Charge Warning Light*	This indicates that the alternator has stopped charging. The engine can still be operated for a short period of time. Contact your local dealer.
7	Glow Plug Light	This indicates that the cold start system is operating. If the light fails to illuminate during the starting procedure contact your local dealer.
8	Key Flap and Ignition Switch	-
9	50A Alternator Output Gauge	-
10	Oil Pressure Gauge	-
11	Water Temperature Gauge	-

*Only applicable if fitted to the engine

4. Overall Dimensions of the Deluxe Control Panel

(All Dimensions are in mm)

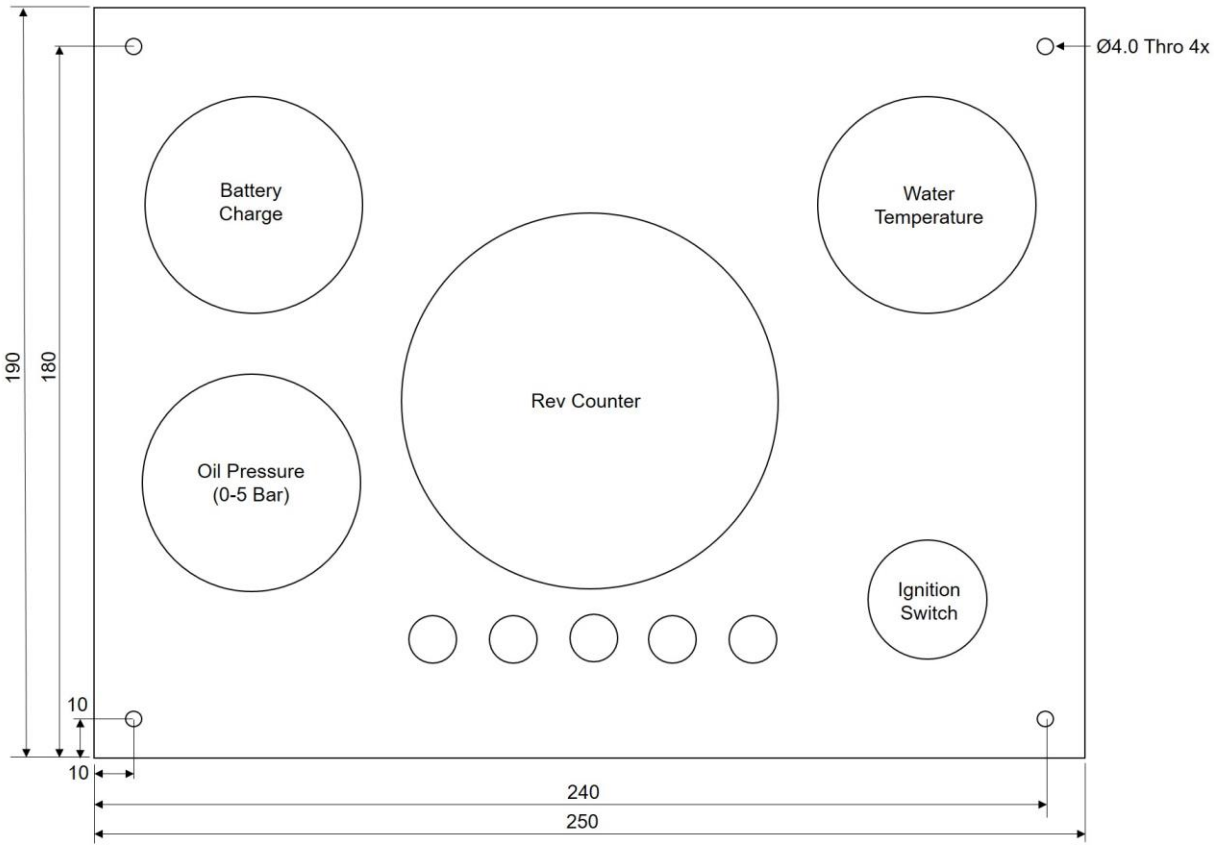

Figure 3: Deluxe Control Panel Dimensions

SECTION 4 – Installation

NOTICE:
REFER TO THE SHIRE AND ENGINE MANUALS PRIOR TO INSTALLING THE ENGINE.

1. **Ventilation**

- All internal combustion engines radiate heat and require cool, clean air to aid complete combustion.
- Please Ensure that adequate engine room ventilation is provided, by fitting at least two vents of an aperture of not less than 15,000mm2 each (24in^2).

An allowance must be made for any grills, louvres or bends placed in the airflows and generally an increase of 25% in area is sufficient to overcome any restriction problems.

2. **Engine Beds**

- These should be a minimum of 10mm thick, extended rearward and be welded to the hull and forward to the bulkhead. Webs or gussets must be welded in place midway to prevent flexing.

3. **Pressurised Water Header Tank**

WARNING:
SCALD HAZARD! NEVER REMOVE THE HEADER TANK CAP IF THE ENGINE IS HOT. STEAM AND HOT COOLANT MAY SPURT OUT AND CAUSE INJURY. TIGHTEN THE HEADER TANK CAP SECURELY AFTER BEING REMOVED. STEAM CAN SPURT OUT DURING ENGINE OPERATION IF THE CAP IS LOOSE.

- The pressurised header tank should be mounted higher than the level of the engine and no more than 1 metre from the engine. This is to prevent cooling system air locks.
- The smaller internal diameter hose tail (left side of the tank) should be connected to the top of the engine. This is the air-bleed. The larger internal diameter hosetail (right

side of the tank) should be connected to the lower pipe on the engine. This is the water fill.

Figure 4: Shire 70 WB Header Tank Connections

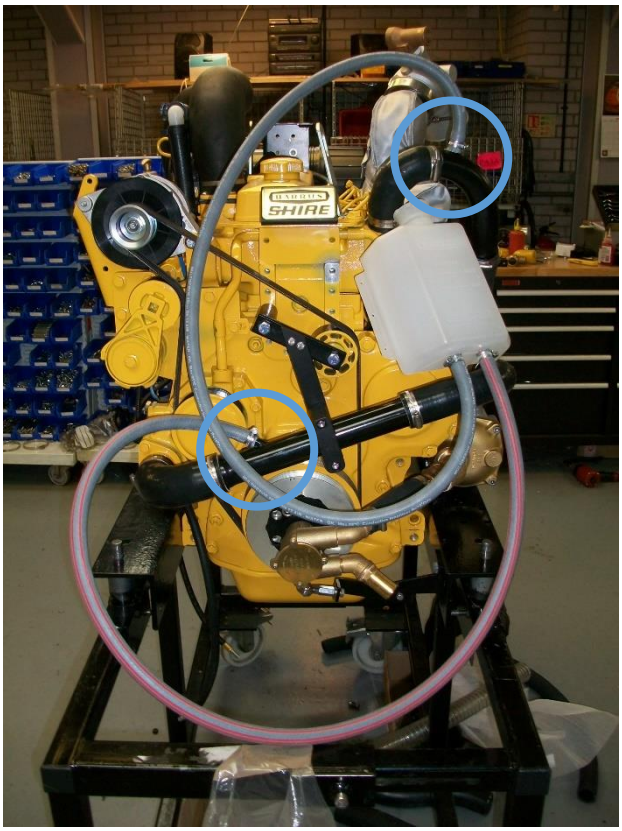

Figure 5: Shire 85 WB Header Tank Connections (Crank Mounted Pump)

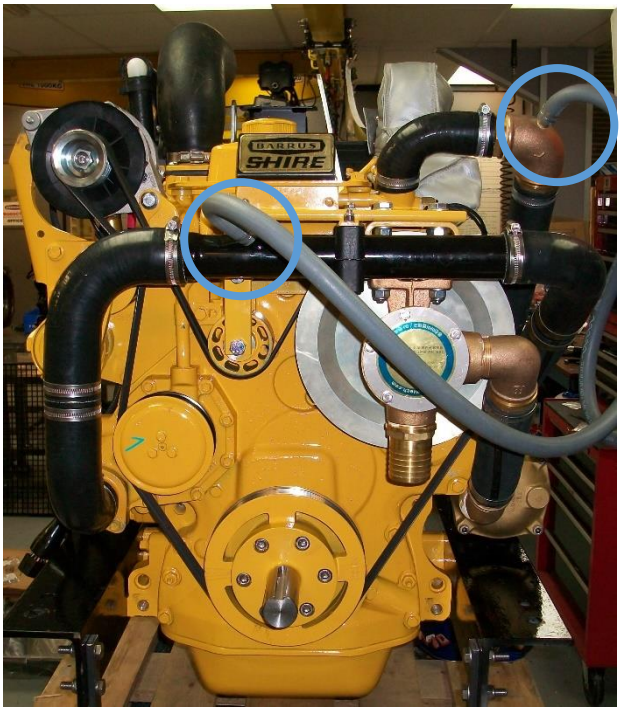

Figure 6: Shire 85 WB Header Tank Connections (Belt Driven Pump)

4. Shaft Connection and Propeller Selection

- Some type of flexible coupling must be used to connect the gearbox output flange to the propeller shaft flange. Various coupling flanges are widely available to assist with this.
- Please note, underperforming engines will not be covered under warranty if the cause of the poor performance is found to be due to the use of an inappropriate propeller.

5. Engine Anti-Vibration Mounts

- Ensure that the engine feet do not end up at the top of the thread on the engine mounts, this puts undue pressure on them and can result in excessive engine movement and premature mount failure. If this is a problem put steel packing plates under the mounts. Packing plates 25mm thick are available: Order RDG3906 Engine mount spacer. Alternatively they can be manufactured locally.
- Ensure that the engine has been installed for at least 24 hours before shaft alignment is checked, to allow the mounts time to settle under the engine weight.
- Ensure that the anti-vibration mount centre screw is sufficiently raised so as not to touch the engine bed. If this occurs, excessive engine vibration will be experienced through the hull.
- For best results, fit the front AV mounts into the front holes in the engine rails. If the engine room space is a problem the mounts can be fitted slightly further back in the alternative holes and the front of the rail cut off – leaving 50mm of material to retain strength (measuring from the centre of the mount hole to the front end of the rail). Note: This procedure is only possible on non Travel Power engines, and may result in

a very slight increase in vibration. AV mount installation points are shown on (**Figure 9**).

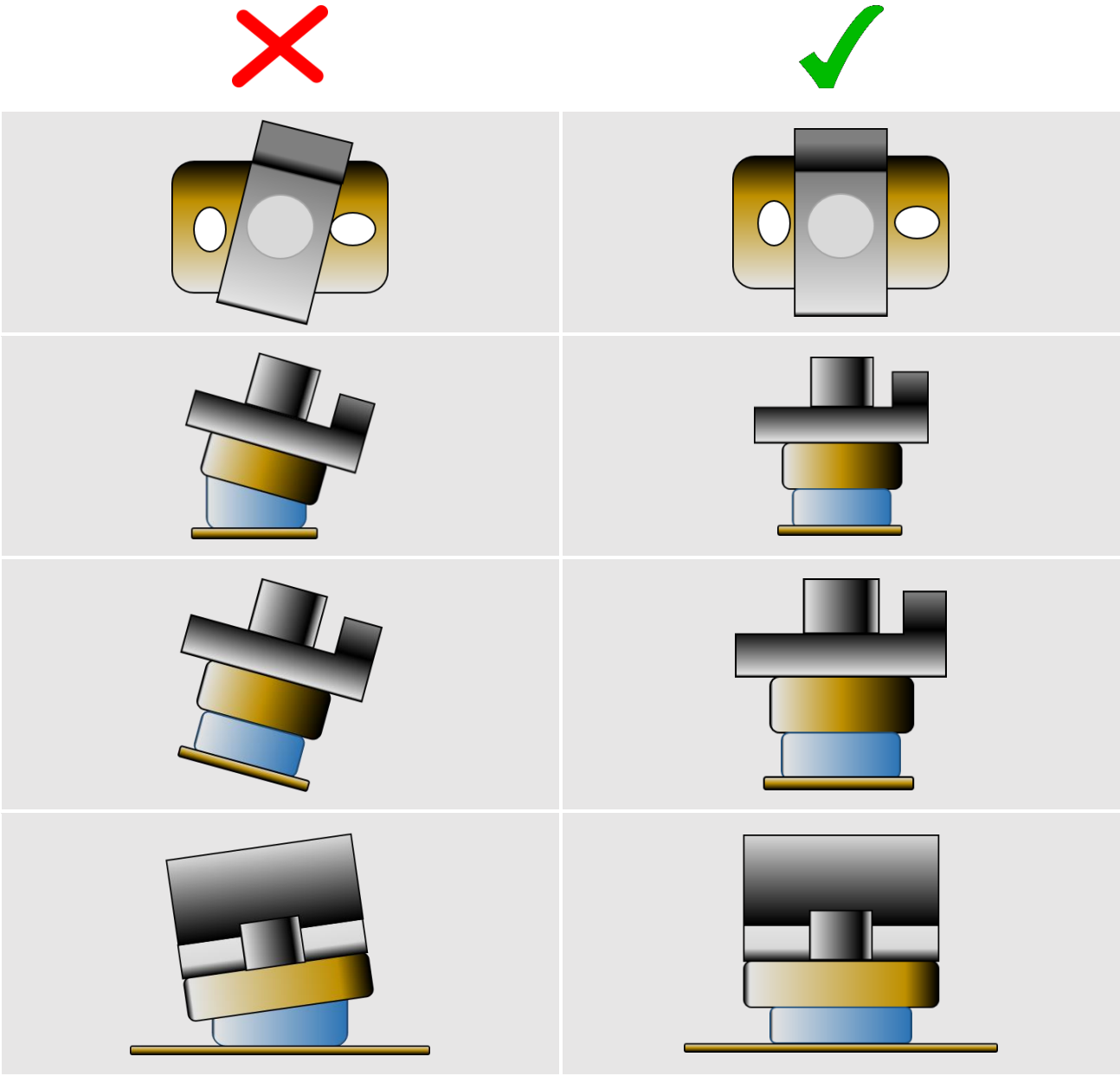

Figure 7: Correct Anti-Vibration Mount Installation

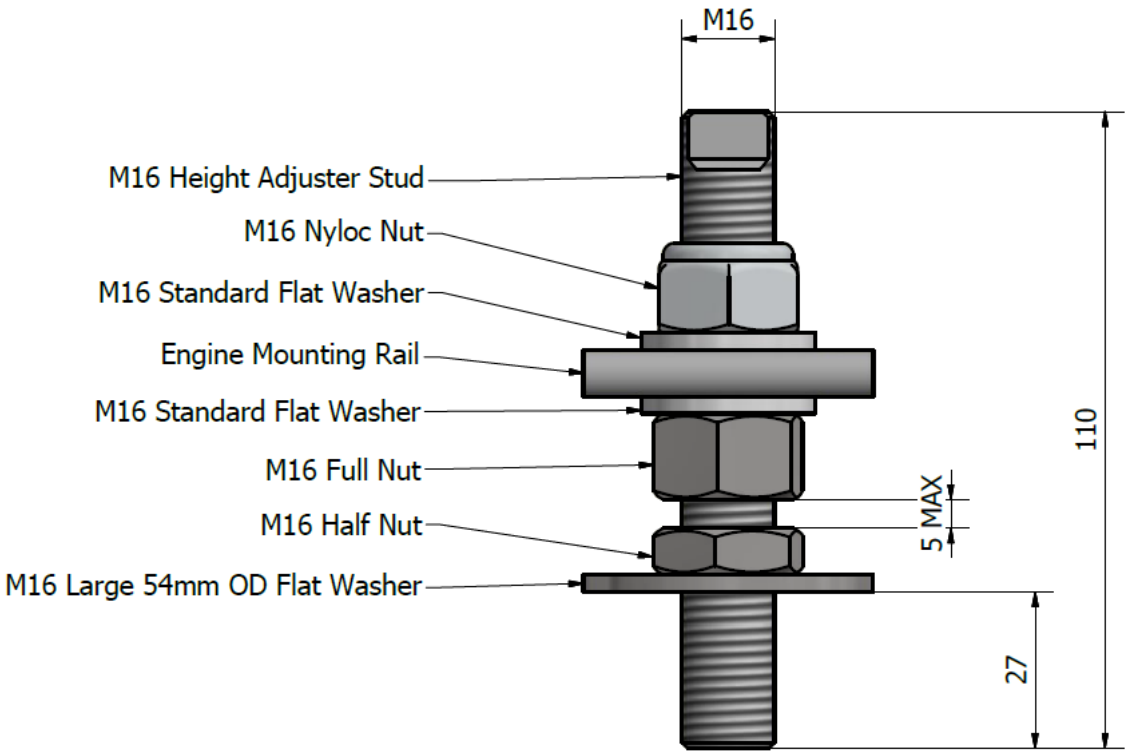

Figure 8: Correct Anti-Vibration Mount Installation

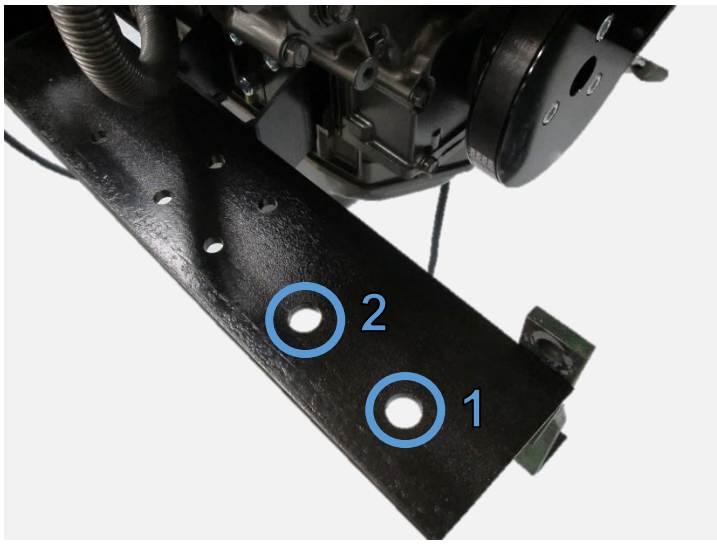

	Description
1	Normal mounting position
2	Alternative mounting position if engine compartment space is restricted

Figure 9: Anti-Vibration Mount Installation Points

6. Engine Alignment

- The gearbox output shaft flange and propeller shaft input flange must be almost

perfectly aligned. A maximum of 0.05mm (0.002”) misalignment in any plane is acceptable. Ensure alignment is recheck after the first 4 hours of running, after the first month and thereafter annually.

- If the engine is out of alignment it will result in excessive vibration and possible damage to the stern tube and propeller shaft.
- Boats that are fitted with fully flexible drive couplings should still have the engine and shaft alignment as close as possible. A dummy shaft may be required for this purpose.

Some types of flexible shaft couplings require the input and output to be misaligned, check with the coupling manufacturer’s installation instructions.

- Minimum clearance of 25mm between rails and engine beds.

7. Engine Inclination

- The engine installation angle is the angle of the crankshaft centre to the water line (**Figure 10**).
- The propulsion efficiency decreases as the engine installation angle increases.
- The **maximum** engine installation angle is 15°

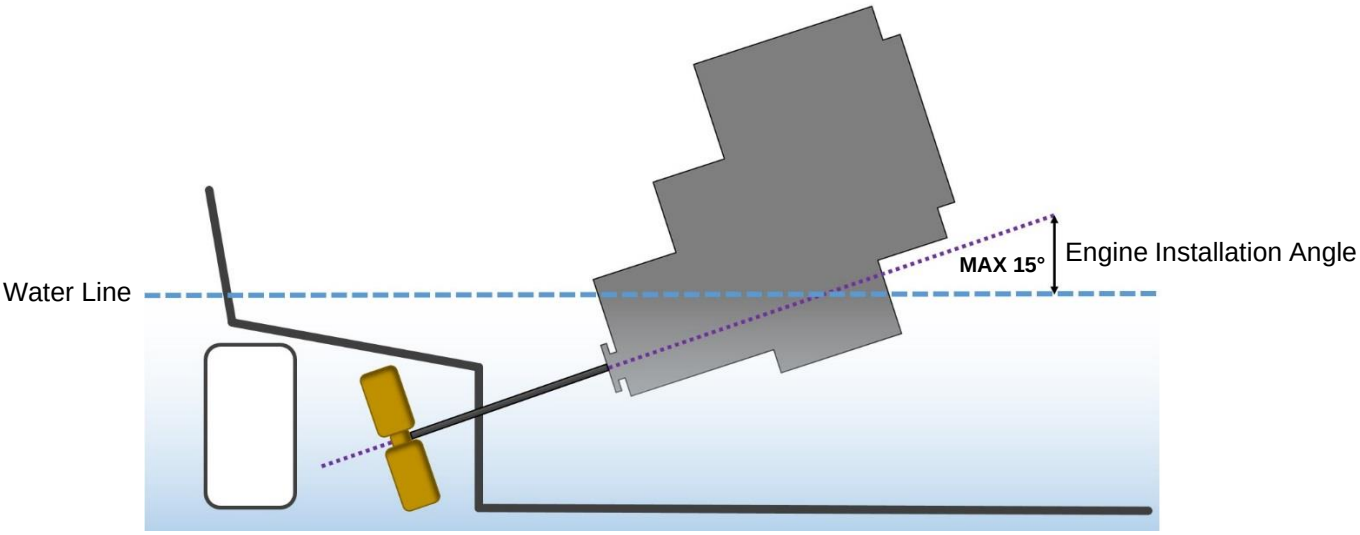

Figure 10: Maximum Engine Installation Angle

8. Electrics

CAUTION

- The blue link wire must be removed when the domestic battery positive lead has been connected to the terminal post. Do not run the engine without either the blue link wire or the domestic battery positive lead connected as alternator damage will occur.
- If the engine is going to be run for more than 1 hour with the blue link wire in place, remove the domestic alternator drive belt to prevent alternator damage.

Single Alternators

- On engines fitted with single alternators, connect the main positive battery cable to the starter motor solenoid terminal
- Do not attach any part, hose or cable to the engine wiring harness. There is a warning label attached to the harness to remind you of this.
- Connect the wiring extension harness multi plug to the panel plug and the other end to the engine.
- Connect the start battery positive cable to the starter motor solenoid terminal.
- The starter motor battery cable must have a cross sectional area of at least 50mm^2.

Twin Alternators

- Shire 70 WB: Connect the domestic battery positive cable to the 240A alternator “Pos Out” terminal. This ensures that the 50A alternator charges the domestic battery. Twin alternators remove the requirement for a split charging system or relay.
- Shire 85 WB: Connect the domestic battery positive cable to the 120A alternator B+ terminal. This ensures that the 150A charges the start battery.
- Shire 70 WB and 85 WB: A cable will need to be manufactured locally and fitted between the lower 240A alternator and domestic battery positive terminal. The cable should have a minimum cross sectional area of 50mm^2
- Both negative battery terminals can be connected to common earth point.

9. Electrical Options

DANGER:

ELECTRIC SHOCK RISK!

- If the engine is fitted with the optional 230V Travel Power System, refer to the manual supplied with it for correct wiring, control box installation and operation.
- The Shire range can be supplied with other optional additional 12V or 24V alternators. This will be supplied fitted but not wired. It is the responsibility of the boat builder to ensure that this is correctly wired to the boats electrical system.

10. Engine Oil

WARNING:

BURN HAZARD! WAIT UNTIL THE ENGINE COOLS BEFORE YOU DRAIN THE ENGINE OIL. HOT ENGINE OIL MAY SPLASH AND BURN YOU.

NOTICE:

ENGINE OIL WITH A HIGHER API CLASS THAN CD IS UNSUITABLE FOR CANAL BOAT OPERATION AND WILL CAUSE ENGINE DAMAGE IF USED.

- All Shire engines are supplied fully run in.
- Check oil levels in engine and gearbox before starting
- For the Shire 70 WB use good quality engine oil SAE 10W / 40 API class CD.
- The Shire 85 WB uses John Deere oil. See **Section 7 – Service Schedule** for the specification of the oil.

11. Fuel

WARNING:

DIESEL FUEL IS FLAMMABLE AND EXPLOSIVE UNDER CERTAIN CONDITIONS.

WARNING:

DIESEL FUEL IS HARMFUL TO SKIN. MAKE SURE THE RELEVANT PERSONAL PROTECTION EQUIPMENT IS WORN.

- Ensure the main fuel tank is clear of dirt and water.
- A separate water trap must be fitted to all engine installations. The Shire 70 WB and 85 WB engines are supplied with an additional fuel pre-filter water trap as standard.
- Connect fuel feed return hoses from engine to main supply and return lines to main fuel tank, ensuring they are connected the correct way around.
- Shire 70 WB – Connect the inlet to the electric fuel pump inlet hose.
- Shire 85 WB – Connect the inlet to the primary fuel filter inlet hose.
- The engine hoses are supplied with 3/8” (10mm) OD metal hosetails and should be securely fitted to the main supply and return pipes with compression fittings.
- The engine hoses should have sufficient slack to absorb engine movement without placing strain on the hoses and be securely clipped to prevent accidental damage and chafing.
- Initially fill the fuel system by turning the ignition on to operate the electric fuel pump. Loosen the bleed screw on the top of the primary fuel filter / water trap. For the Shire 70 WB, turn on the ignition to operate the electric fuel pump. For the Shire 85 WB,pump the primer on the primary filter. Close when fuel begins to flow clearly (no bubbles). It is rarely necessary to bleed the injection pump or injectors upon installation as the engine will already have fuel in it from the engine run in and test procedure.

12. Coolant

WARNING:

SCALD HAZARD! NEVER REMOVE THE COOLANT BOTTLE CAP IF THE ENGINE IS HOT. STEAM AND HOT COOLANT WILL SPURT OUT AND CAUSE INJURY. TIGHTEN THE CAP SECURELY AFTER BEING REMOVED. STEAM CAN SPURT OUT DURING ENGINE OPERATION IF THE CAP IS LOOSE.

WARNING:

BURN HAZARD! WAIT UNTIL THE ENGINE COOLS BEFORE YOU DRAIN THE ENGINE COOLANT. HOT ENGINE COOLANT MAY SPLASH AND BURN YOU.

WARNING:

BURN HAZARD! THE WATER COOLED EXHAUST MANIFOLD IS HOT AND MAY BURN YOU.

- For the Shire 70 WB, Yanmar recommend a prepared coolant mix of 50% clean tap water and 50% antifreeze.
- For the Shire 85 WB, John Deere recommend that Cool Gard is used. Cool Gard is already mixed and must **NOT** have water added to it.
- To fill the engine cooling system for the first time, add coolant to the engine through the white plastic expansion bottle.
- Open the calorifier taps (if fitted) to fill the calorifier system and displace air.

After running the engine for the first time, stop the engine and monitor the water level frequently as trapped air bubbles may be expelled. Top up the system as necessary.

13. Control Cables

- Connect engine speed control cable. With the engine off, ensure that the engine speed control lever achieves full travel from idle to full speed. Adjust if necessary.
- Check the gearbox shift lever selects positively and that the drive direction corresponds with the gearshift control lever. Ensure that the gearbox control lever and the gearshift lever are both in neutral before connection. Adjust if necessary.

14. Domestic Battery Bank (with optional Twin Alternator Engines)

DANGER:

EXPLOSION HAZARD! NEVER SHORT OUT THE BATTERY TERMINALS, INCLUDING WHEN CHECKING THE REMAINING BATTERY CHARGE THIS WILL RESULT IN A SPARK AND MAY CAUSE AN EXPLOSION OR FIRE.

WARNING:

BURN HAZARD! BATTERIES CONTAIN SULPHURIC ACID. NEVER ALLOW BATTERY FLUID TO COME IN CONTACT WITH SKIN, EYES OR CLOTHING. SEVERE BURNS COULD RESULT. MAKE SURE THE CORRECT PERSONAL PROTECTION EQUIPMENT IS WORN.

Domestic battery banks that are too large create excessive loads on the domestic alternator. Alternators running at maximum output for prolonged periods of time will eventually fail prematurely; alternators that fail due to the battery bank being over the maximum recommended size will not be covered by warranty.
Higher output additional alternators, or travel power kits are available: if larger battery banks are required discuss your individual power requirements with the boat builder or engine supplier.

- The maximum domestic battery bank is calculated using the following:
    - Live aboard, three times domestic alternator, maximum output current.
    - Weekend cruising or hire fleet use, three and a half times domestic alternator, maximum output current.

Example 1:

Live aboard application fitted with a 150amp domestic alternator

3 x 150 = 450 ampere/hour maximum battery bank size

Example 2:

Weekend cruising or hire fleet application fitted with a 240amp domestic alternator

3.5 x 240 = 840 ampere/hour maximum battery bank size.

15. Seawater Strainer

- A bulkhead mounted seawater strainer or similar is **NOT** supplied with the engine. We recommend that one is fitted between the seawater inlet (seacock) and the sea water pump inlet.

16. Control Panel

CAUTION

All Shire engines are supplied with an engine control panel that shows RPM and hours run and include warning lights and a warning buzzer. The deluxe panels also have additional gauges for the water temp, oil pressure and battery charging. The panels are designed to be splash proof and are correctly installed with the gauges vertical. Do not install so that they remain out in the open, or cover up when not on use.

The control panel engine tachometer is supplied already calibrated to measure correct engine speed. If a new control panel, tachometer or alternative alternator is fitted, the tacho will require re-calibrating.

Control Panel Calibration Procedure:

- Connect control panel plug to engine wiring loom plug.
- Turn ignition on (do not start engine).
- Press and hold black button on rear of tacho until “H-“appears on the digital display at the bottom of the tacho (on the front).
- When pressing and holding the black button on rear of tacho, the value displayed will increase / decrease until the button is released. Then when pressing again it will increase / decrease in the other direction. Keep doing this until the digitally displayed value on the bottom of tacho reaches the correct value, according to the type of alternator (see below table). This must be set to the alternator with blue and black wire connected to it.
- Confirm settings to tacho meter reader.
- An optical tachometer is required to check the reading.

Barrus Alternator (Amps)	Barrus Tacho reading
50	10.50 – 11.00
70	15.00
150	19.50 – 20.00
240	22.00

Alternative or non-standard alternators will require calibrating and checking by trial and error, with a hand held tacho until the engine speed and indicated tachometer speed are the same.

17. Calorifiers (Optional)

- These are not fitted as standard but are available as an option
- If calorifiers are fitted the following instructions must be complied with:

The temperature of coolant flowing to the calorifier from the engine can be between 85 and 90°C. A blender valve must be incorporated in the calorifier / hot water system outlet to lower the hot water temperature for domestic use.

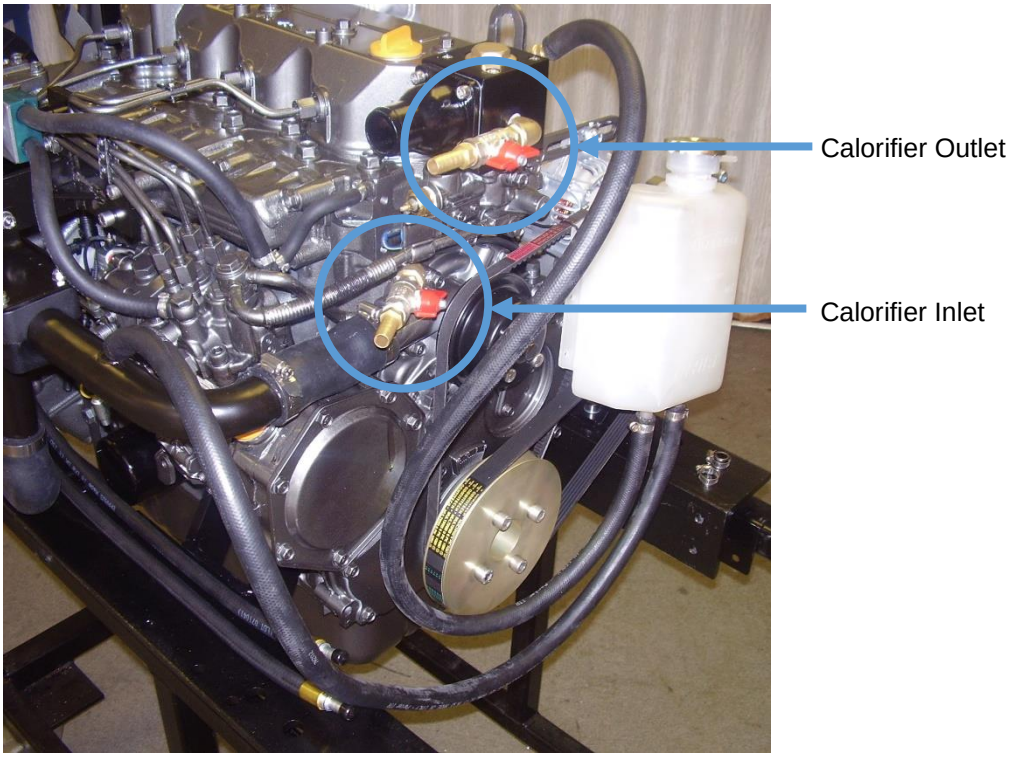

Figure 11: Shire 70 WB Calorifier Connections

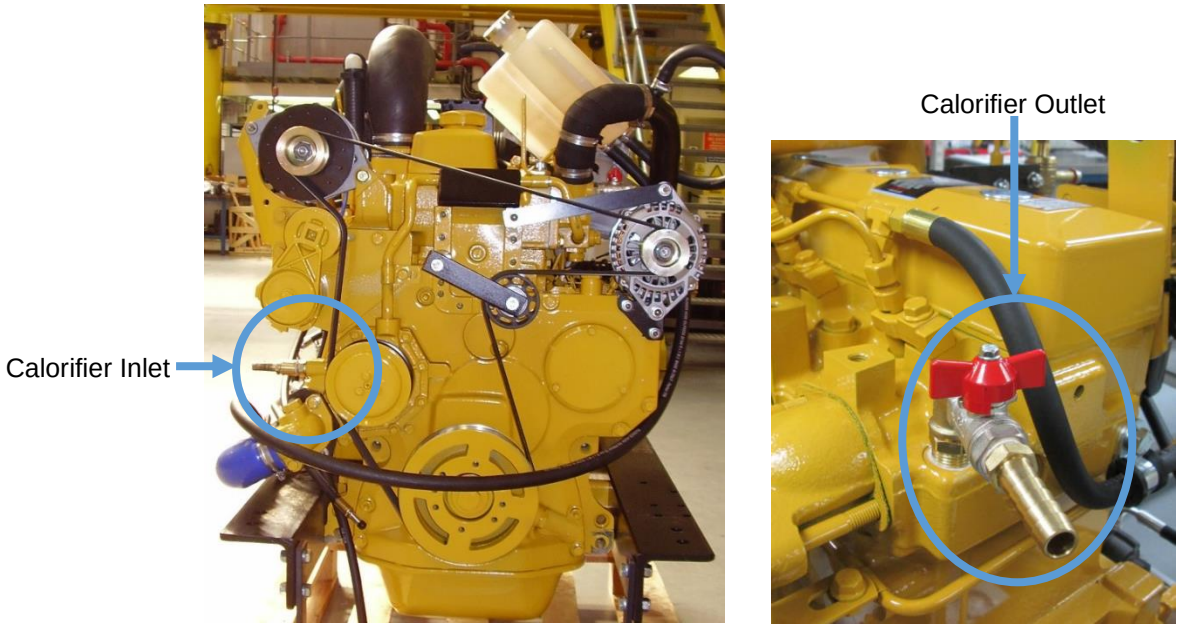

Figure 12: Shire 85 WB Calorifier Connections

18. Installation Check List

	Please tick box ✔
Engine alignment correct, clearance all round, check propeller turns by hand (Ensure ignition is off battery and battery master switch is off)	
Anti-Vibration mounts correct height, spacers if necessary. Make sure all nuts are tight	
Exhaust system as specified	
Battery leads are of correct size, tightened and start battery is charged	
Check tension of alternator belts, wiring connected and belt alignment checked if removed	
Check fuel system is connected correctly and primed	
Fuel line water trap installed and water drained off	
Check header tank connections are correct way round, constant pipework rise to header tank	
Check level of coolant in header tank or manifold and correct ratio of antifreeze to water	
All air has been bled from skin tank, calorifier and pipework	
Engine and gearbox oil levels are as specified	
Throttle and gear cables correctly adjusted and operating smoothly	
All pipework and cabling supported and not chaffing, slack to allow movement of engine	
Engine control panel installed in a position where it is not out in the open	
Confirm engine control panel, gauges and warning lights are all operational	
Suitable specification of hose between seacock and seawater pump with no restrictions is fitted	
Run the engine for 20 minutes with the boat tied up and in gear (at ½ speed). Check for leaks and that all systems operate correctly	
Check & Set the Engine Idle Speed to 850-875 rpm	
Check for leaks	
Explain/Demonstrate daily/weekly/periodic maintenance checks	
Explain/Demonstrate off season storage and maintenance	
Travel Power 230v AC systems installed by qualified electrician and to BMEA code of practice for Electrical and Electronic installation in Boats: BS EN ISO 13297 (ac)	
Installer's signature	
Installer name/company	

SECTION 5 – Operation

NOTICE:

REFER TO THE ENGINE MANUAL PRIOR TO STARTING THE ENGINE.

1. Starting the engine for the first time

- Remove ignition key.
- Ensure all oil and coolant levels are checked.
- Ensure both the engine and domestic batteries are connected. Both battery master switches must be turned on. Failure to do so may damage the domestic alternator.
- Ensure that the raw water seacock is turned on.

2. Starting Procedure

- Ensure there is no one in the engine compartment.
- Ensure the engine compartment door is closed.
- Ensure the gearshift control level is set to neutral and that all persons are clear of any moving parts.
- Insert ignition key.
- Turn key to on position. The glow plug light will illuminate.
- Observe warning lights (and gauges on deluxe panel). Note: The engine water temperature overheat warning light will only come on for a brief period of time when the ignition is first turned on as a bulb check. It will then only illuminate in the case of the engine coolant temperature exceeding the maximum safety level.
- Wait for the glow plug warning light to go out.
- Turn key to start and hold to crank.
- Crank the engine for no more than 15 seconds.
- Upon engine start, immediately release the key.
- Key will return to on position.
- The warning buzzer will stop and on the deluxe panel, the oil pressure gauge will show an oil pressure of 3.5 - 4.5 bar (51 – 61 psi).
- Should any warning light not go out, or if there is no reading on the oil pressure gauge, the buzzer will continue sounding. In this case, stop the engine immediately and check the relevant system (Note: If the charge light does not go out, briefly increase the engine speed).
- Once started check that sea water is coming out of the water cooled exhaust outlet in the hull of the boat.

- Stop engine if any abnormal noises are detected.
- Visually check the engine for oil, fuel and coolant leaks, after initial start-up and at regular intervals. Note: Engine must be stopped to carry out this check).

3. Stopping Procedure

- Move speed control lever to idle position.
- Turn key to off position.

4. Full Load Running

- Running diesel engines near there rated output (maximum load) regularly will disperse accumulated carbon and condensation, enhancing engine life and reducing emissions.

5. Refuelling

WARNING:

DIESEL FUEL IS FLAMMABLE AND EXPLOSIVE UNDER CERTAIN CONDITIONS.

WARNING:

DIESEL FUEL IS HARMFUL TO SKIN. MAKE SURE THE RELEVANT PERSONAL PROTECTION EQUIPMENT IS WORN.

- All Shire boat engines run on diesel fuel.
- Please note that when the vessel is to be left for any period of time, the fuel tank should be left full to eliminate the build-up of condensation and formation of water in the fuel tank.
- Engine to be turned off while refuelling
- The fuel type for all Shire boat engines is diesel. **DO NOT USE BIODIESEL.**

6. Diesel Fuel Additive

The use of diesel fuel additive is strongly recommended on Shire engines. The quality of the fuel available when cruising is often unknown. Also the fuel may have been in storage for long periods of time. The use of additives will ensure that your engine fuel injection system is in top condition which should result in many years of smooth reliable operation, without the cost and inconvenience of expensive breakdowns due to poor quality fuel. It has also been

found that improvements in fuel consumption and start ability are an added benefit of using this product. Diesel fuel additive is available from your Shire dealer in a handy 500ml container, Part Number RDG80210219.

7. **Exhaust Back Pressure (Work Boat with dry exhaust)**

- Use 100mm ID suitable machine flexible exhaust hose on both Shire 70 WB and 85 WB. Do not step down to a smaller size.

SECTION 6 – Service Procedure

NOTICE:

REFER TO THE ENGINE MANUAL PRIOR TO CARRYING OUT ANY SERVICE OR MAINTENANCE WORK.

WARNING:

PRIOR TO CARRYING OUT ANY SERVICE OR MAINTENANCE WORK MAKE SURE THE RELEVANT PERSONAL PROTECTION EQUIPMENT IS WORN.

1. Engine Oil and Filter Change

WARNING:

BURN HAZARD! WAIT UNTIL THE ENGINE COOLS SLIGHTLY BEFORE YOU DRAIN THE ENGINE OIL. HOT ENGINE OIL MAY SPLASH AND BURN YOU.

- Change the engine oil while the engine is still warm.
- Remove the blanking plug in the sump pump spout (8mm Allen key). The larger of the two oil extraction pumps is for draining engine oil.
- Place a plastic tube over the spout and into a container. Operate the pump handle to empty the sump. Note: Remember to refit the blanking plug afterwards.
- Place a drip tray under the engine to catch the small amount of oil that will escape from the oil filter. Using a strap type oil filter removal tool, slacken the filter from the engine block in an anti-clockwise direction. Remove the tool and spin off the filter.
- Lightly oil the new filter O ring seal and install the filter onto the engine. Spin it on in a clockwise direction and finally tighten by hand only as firmly as you can.
- Refill the sump using the yellow oil filler cap in the rocker cover on top of the engine.
- Oil level should be to the top mark on the dipstick.
- Run the engine for 5 minutes before checking the oil level with the dipstick and top up if required.
- Do not exceed the maximum oil level marker as this may cause damage to the internal components of the engine.

2. Air Filter Check and Change

- Release the two spring clips. Pull off the end cover to reveal the filter element. The element simply pulls out. Note: The Shire 85 WB has an inner safety element fitted.
- To fit the new element, slide the open end of the filter element into the main body. Gently push the element until fully seated. Refit the end cover.
- The air filter is constructed from pleated paper. Inspect it closely for dust or dirt. The air filter cannot be cleaned and must be replaced when dirty. The engine requires clean unrestricted air to run efficiently. Failure to maintain the air filter could result in smoke, increased fuel consumption and ultimately engine damage.

3. Gearbox Oil Change

WARNING:

BURN HAZARD! WAIT UNTIL THE GEARBOX COOLS SLIGHTLY BEFORE YOU DRAIN THE GEARBOX OIL. HOT OIL MAY SPLASH AND BURN YOU.

- Change the gearbox oil while it is still warm (Please refer to the gearbox manual for more information).
- Remove the blanking plug in the gearbox drain pump (6mm Allen Key). The smaller of the two oil extraction pumps is for draining gearbox oil.
- Place a plastic tube over the spout and into a container (no less than 3 litres). Operate the pump handle to empty the gearbox. Note: Remember to refit the blanking plug afterwards.
- Refill the gearbox with oil to the upper mark on the dipstick. Screw the dipstick in fully, to establish level. Refer to the PRM owner manual for more details. **Section 6** in this manual contains details of oil specifications.
- Do not overfill the gearbox as this can damage the internal components.

Gearbox Model	Location of Dipstick / Filler Plug
PRM 280	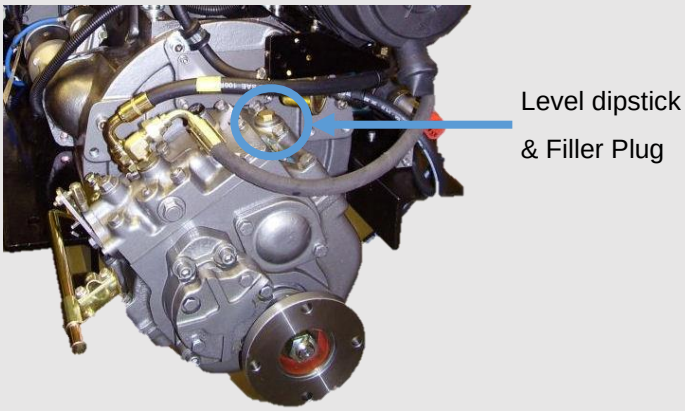

Figure 13: Location of Dipstick / Filler Plug / Drain Plug on Gearbox

4. Disposal of Oil and Related Items

NOTICE:

ALWAYS BE ENVIRONMENTALLY RESPONSIBLE.

- Please dispose of used oil and oil filters safely with due regard for the environment and take to your local waste oil disposal point.
- Do not allow oil or contaminated parts to enter the inland water way system.

5. Primary Fuel Filter Drain

WARNING:

DIESEL FUEL IS FLAMMABLE AND EXPLOSIVE UNDER CERTAIN CONDITIONS.

WARNING:

DIESEL FUEL IS HARMFUL TO SKIN. MAKE SURE THE RELEVANT PERSONAL PROTECTION EQUIPMENT IS WORN.

- Place a small drain bowl under the primary fuel filter / water trap.
- Loosen the drain screw located in the bottom of the fuel filter / water trap (**Figure 14**)
- Drain off any water.

- Once the water has been drained, retighten the drain screw.
- It is unlikely the complete fuel system will require bleeding.
- Run for 5 minutes.
- Check that the drain union is tight and that there are no leaks.
- Do not over tighten the drain screw.

The boat builder should have fitted an additional water trap in the fuel system. Ensure that this is drained regularly.

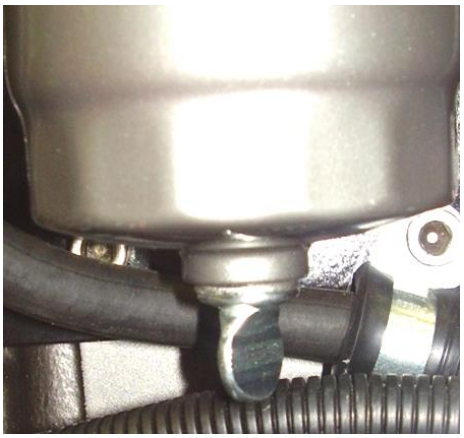

Figure 14: Primary Fuel Filter Drain Screw

6. Primary Fuel Filter Change

DANGER:

DIESEL FUEL IS FLAMMABLE AND EXPLOSIVE UNDER CERTAIN CONDITIONS.

WARNING:

DIESEL FUEL IS HARMFUL TO SKIN. MAKE SURE THE RELEVANT PERSONAL PROTECTION EQUIPMENT IS WORN.

Shire 70 WB:

- Ensure the fuel tank is at least ¾ full prior to undertaking this procedure.
- Turn off the main boat fuel supply tap. This is located on or near the fuel tank.
- Place a small drip tray under the filter body.

- Remove the fuel filter using the filter strap wrench supplied. Unscrew until loose then remove by hand.
- Retain the metal fuel filter drain screw from the old filter and reuse in the new filter. The part number for the drain screw is RDG9189022.
- Smear a small amount of clean fuel on all of the O ring seal that is supplied with the new filter element.
- Screw the new element back into the filter head. Tighten by hand only.
- Turn the main boat fuel supply tap back on.
- Ensure the system is correctly bled before attempting to start up.

Shire 85 WB:

- Ensure the fuel tank is at least ¾ full prior to undertaking this procedure.
- Turn off the main boat fuel supply tap. This is located on or near the fuel tank.
- Place a small drip tray under the filter body.
- Undo the centre bolt (11mm or 7/16" AF spanner) and remove.
- Pull down the bowl. The filter element pulls down from the top cover.
- Retain the metal fuel filter drain screw from the old filter and reuse in the new filter. The part number for the drain screw is RDG9189022.
- Smear a small amount of clean fuel on all of the O ring seal that is supplied with the new filter element.
- Push the new element up into the top cover. Refit the bowl, positioning so that the drain screw is accessible and refit the centre bolt.
- Ensure all the parts are aligned correctly and tighten the centre bolt.
- Turn the main boat fuel supply tap back on.
- Ensure the system is correctly bled before attempting to start up.

7. Secondary Fuel Filter Change

DANGER:

DIESEL FUEL IS FLAMMABLE AND EXPLOSIVE UNDER CERTAIN CONDITIONS.

WARNING:

DIESEL FUEL IS HARMFUL TO SKIN. MAKE SURE THE RELEVANT PERSONAL PROTECTION EQUIPMENT IS WORN.

- For Shire 70 WB, refer to Yanmar Operators Manual (fuel paragraph in Section 3).
- For Shire 85 WB, refer to John Deere Operators Manual (Lubrication and Maintenance).

The metal fuel filter water drain screw must be retained and put into the new filter element.

8. Fuel System Bleeding

DANGER:
DIESEL FUEL IS FLAMMABLE AND EXPLOSIVE UNDER CERTAIN CONDITIONS.

WARNING:
DIESEL FUEL IS HARMFUL TO SKIN. MAKE SURE THE RELEVANT PERSONAL PROTECTION EQUIPMENT IS WORN.

- Ensure the fuel tank is at least ¾ full prior to undertaking this procedure.
- For Shire 70 WB, refer to Yanmar Operators Manual (fuel paragraph in Section 3).
- For Shire 85 WB, refer to John Deere Operators Manual (Lubrication and Maintenance).

9. Cooling System

DANGER:
SCALD HAZARD! NEVER REMOVE THE COOLANT PRESSURE CAP IF THE ENGINE IS HOT. STEAM AND HOT COOLANT WILL SPURT OUT AND SERIOUSLY BURN YOU. TIGHTEN THE CAP SECURELY AFTER BEING REMOVED. STEAM CAN SPURT OUT DURING ENGINE OPERATION IF THE CAP IS LOOSE.

WARNING:

BURN HAZARD! WAIT UNTIL THE ENGINE COOLS BEFORE YOU DRAIN THE ENGINE COOLANT. HOT ENGINE COOLANT MAY SPLASH AND BURN YOU.

- To check the coolant level, ensure that the engine has been shut down for at least half an hour.
- The coolant level can be checked visually and should be between the two level marks formed on the front of the white plastic expansion tank.
- If required, top up the level with coolant (50% clean tap water and 50% ethylene glycol based anti-freeze) through the expansion tank filler cap.
- Do not use water only to top up as this weakens the coolant mix, reducing the level of frost protection and anti-corrosion protection of the coolant.
- The Shire 70 WB and 85 WB have a seawater inlet size of 28mm.

10. Belt Adjustment

WARNING:

SEVERE HAZARD! KEEP HANDS AND OTHER BODY PARTS AWAY FROM MOVING/ROTATING PARTS. WEAR TIGHT FITTING CLOTHING AND KEEP YOUR HAIR SHORT OR TIE BACK. REMOVE ALL JEWELLERY BEFORE COMMENCING WORK. CHECK BEFORE STARTING THE ENGINE THAT ANY TOOLS OR RAGS USED DURING MAINTENANCE HAVE BEEN REMOVED FROM THE AREA.

- Ensure the ignition key is removed before carrying out any adjustments.
- Turn the battery master switch to the off position before carrying out any adjustments
- Depress the longest run of the drive belt to be checked. If the travel exceeds 15-20mm using hard finger pressure, the belt needs re-tensioning.
- Loosen the upper adjuster on the alternator. Loosen the lower mounting pivot nut and bolt. Pull out either using hand pressure or using the tensioning screw, depending on which alternator belt is to be tensioned.
- Pull the alternator away from the engine to tighten the belt.
- Hold the alternator in position and retighten all the bolts

If the belts are over tightened, alternator bearing failure will occur. The Shire 85 WB 120A Alternator is self-adjusting.

11. Belt Maintenance

WARNING:

SEVERE HAZARD! KEEP HANDS AND OTHER BODY PARTS AWAY FROM MOVING/ROTATING PARTS. WEAR TIGHT FITTING CLOTHING AND KEEP YOUR HAIR SHORT OR TIE BACK. REMOVE ALL JEWELLERY BEFORE COMMENCING WORK. CHECK BEFORE STARTING THE ENGINE THAT ANY TOOLS OR RAGS USED DURING MAINTENANCE HAVE BEEN REMOVED FROM THE AREA.

- Ensure the ignition key is removed before carrying out any maintenance.
- Turn the battery master switch to the off position before carrying out any maintenance.
- Do not allow oil to contact the belt. Oil attacks the construction of the belt. This reduces the drive efficiency and ultimately cause it to fail prematurely.
- Replace the belt if it cracks or splits and as the adjustment nears the limit of travel.

Some boat builders may remove one or more of the alternators during the installation of the engine. It is essential that when the alternators are refitted that the alignment is perfect or premature belt wear will occur.

12. Belt Replacement

WARNING:

SEVERE HAZARD! KEEP HANDS AND OTHER BODY PARTS AWAY FROM MOVING/ROTATING PARTS. WEAR TIGHT FITTING CLOTHING AND KEEP YOUR HAIR SHORT OR TIE BACK. REMOVE ALL JEWELLERY BEFORE COMMENCING WORK. CHECK BEFORE STARTING THE ENGINE THAT ANY TOOLS OR RAGS USED DURING MAINTENANCE HAVE BEEN REMOVED FROM THE AREA.

Shire 70 WB:

- Ensure the ignition key is removed before replacing any belts.
- Turn the battery master switch to the off position before replacing any belts.
- Ensure that you have the correct replacement belts before starting this procedure. Some engines may have been fitted with non-standard optional alternators which may not use the belt sizes listed. Make a note of these belt sizes upon delivery.
- Loosen the top adjuster bolts and the lower mounting pivot nut and bolt.
- Push the alternator towards the engine to loosen the belt.
- Remove the belt.
- Hold the belt in position over the top alternator pulley. Rotate the engine if required by hand, to guide the new belt into the “vee”.
- Replace the seawater pump (if required).
- Re-tension the belt as above.

Shire 85 WB:

- Ensure the ignition key is removed before replacing any belts.
- Turn the battery master switch to the off position before replacing any belts.
- Insert a ½” drive “T” bar into the square recess of the automatic tensioner.
- Pul lever bar in anti-clockwise direction to slacken off the belt.
- Remove the belt.
- Pull lever bar anti-clockwise again and refit the belt.
- Check the belt is fitted correctly into all of the pulley grooves.

The tensioner brace bar will need to be removed before the old belt can be removed. Refit the tensioner brace bar after the new belt has been fitted.

Figure 15: Shire 85 WB Alternator Belt

	Description
1	120A Alternator
2	Automatic Adjuster

13. Control Panel Maintenance

WARNING:

REMOVE THE IGNITION KEY BEFORE WORKING IN ENGINE COMPARTMENT.
TURN BATTERY ISOLATION SWITCHES OFF.

- **To replace an illumination bulb:** Release the panel from its mounting. The bulbs are accessible from the rear of the panel. Remove the wires, unscrew the nut and pull out the bulb housing from the panel. Remove the bulb and replace. Refit bulb housing, screw the nut back up and refit the wires.
- **To replace any gauge:** Release the panel from its mounting. The gauges are accessible from the rear of the panel. Unplug the wire connectors, unscrew and pull the gauge out of the panel. Replace the gauge and refit. Reattach the wiring connectors.

Periodically squirt a lubricant into the key switch slot when the key has been removed (see Section 8 – Service Schedule). A lubricant such as WD40 – with silicon, would be suitable. Other lubricants are available. Then with the battery master switch turned off, operate the key switch a couple of times. This will ensure the lubricant works into the mechanism.

SECTION 7 – Service Schedule

NOTICE:

REFER TO THE ENGINE MANUAL PRIOR TO CARRYING OUT ANY SERVICE OR MAINTENANCE WORK.

WARNING:

PRIOR TO CARRYING OUT ANY SERVICE OR MAINTENANCE WORK MAKE SURE THE RELEVANT PERSONAL PROTECTION EQUIPMENT IS WORN.

1. Specifications and Capacities

Shire 70 WB: Specification of Coolants and Lubricants to use:

Component	Lubricant
Engine	SAE 10W 40 API Class CD Oil
Coolant	50% Clean Water + 50% Ethylene Glycol Antifreeze
PRM 280 Gearbox	Engine Oil

Engine Oil Capacity (with Filter):

Engine	Capacity (Litres)	Capacity (Pints)
70 WB	10.5	18.5

Gearbox Oil Capacity (Excluding Cooler):

Gearbox	Capacity (Litres)	Capacity (Pints)
PRM 280	2.2	3.9

Shire 85 WB: Specification of Coolants and Lubricants to use:

Component	Lubricant
Engine	John Deere Specification Oil
Coolant	John Deere Cool Gard (ready mixed)
PRM 280 Gearbox	Engine Oil or SAE 10W 40 API Class CD Oil

Engine Oil Capacity (with Filter):

Engine	Capacity (Litres)	Capacity (Pints)
85 WB	8.5	15

Gearbox Oil Capacity (Excluding Cooler):

Gearbox	Capacity (Litres)	Capacity (Pints)
PRM 280	2.2	3.9

2. Service Intervals

	Check	Change	Notes
Engine Oil & Filter	Daily (Level)	Every 350 Hours OR 12 Months*	First change after 50 hours
Gearbox Oil	Weekly (Level)	Every 350 Hours OR 12 Months*	First change after 25 hours
Coolant Level	Daily (Level)	Every 24 Months	-
Diesel Fuel Filter – Primary & Engine**	50 hours	At first 50 hour service and then every 500 hours OR 12 Months*	Drain water every 50 hours OR Monthly***
Air Filter Element	250 Hours	Every 500 hours OR 24 Months*	Sooner if required
Drive Belts	Daily	As required	Adjust as necessary
Key Switch	Lubricate	Every 150 hours OR 12 Months*	As per instructions in Section 7 - Service Procedure

* Whichever occurs first.

** Only original filters which meet the Recreational Craft Directive should be fitted to your engine

*** If large quantities of water are found in the fuel when the filter is drained, increase the frequency of draining.

SECTION 8 – Wiring Diagrams

1. Engine Wiring Diagram Shire 70 WB

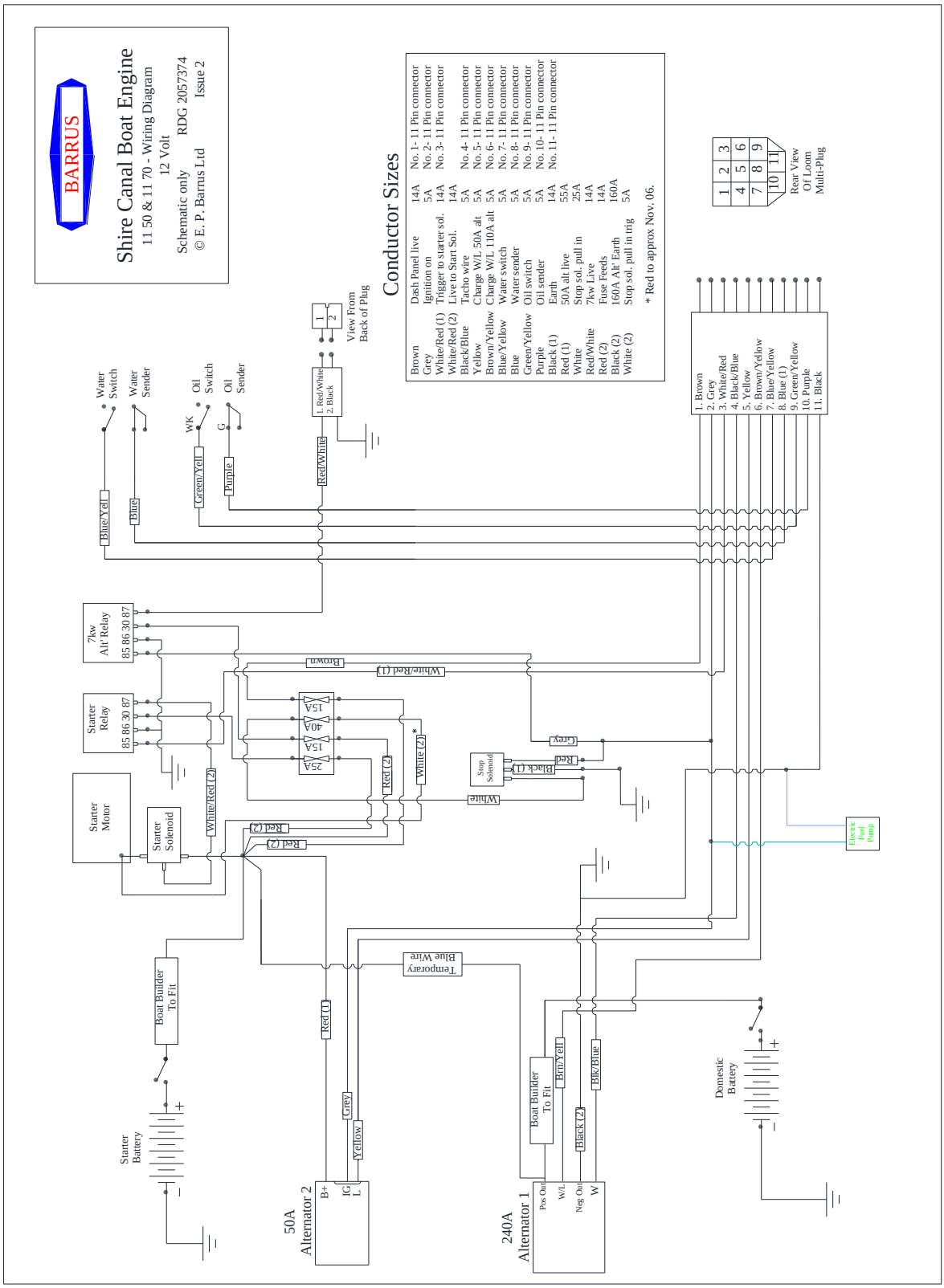

Figure 16: Shire 70 WB Wiring Diagram

2. Engine Wiring Diagram Shire 85 WB

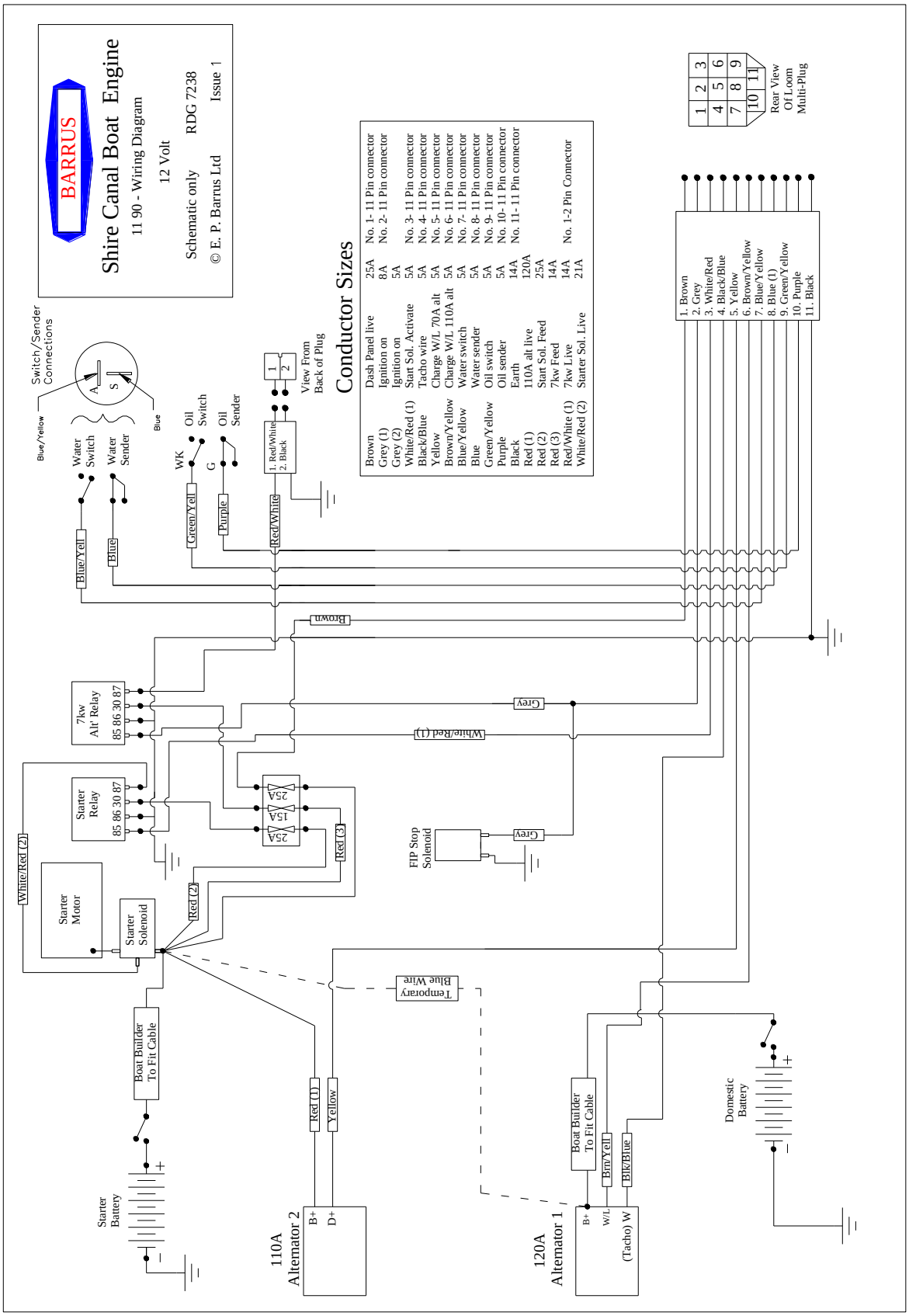

Figure 17: Shire 85 WB Wiring Diagram

3. Deluxe Control Panel Wiring Diagram

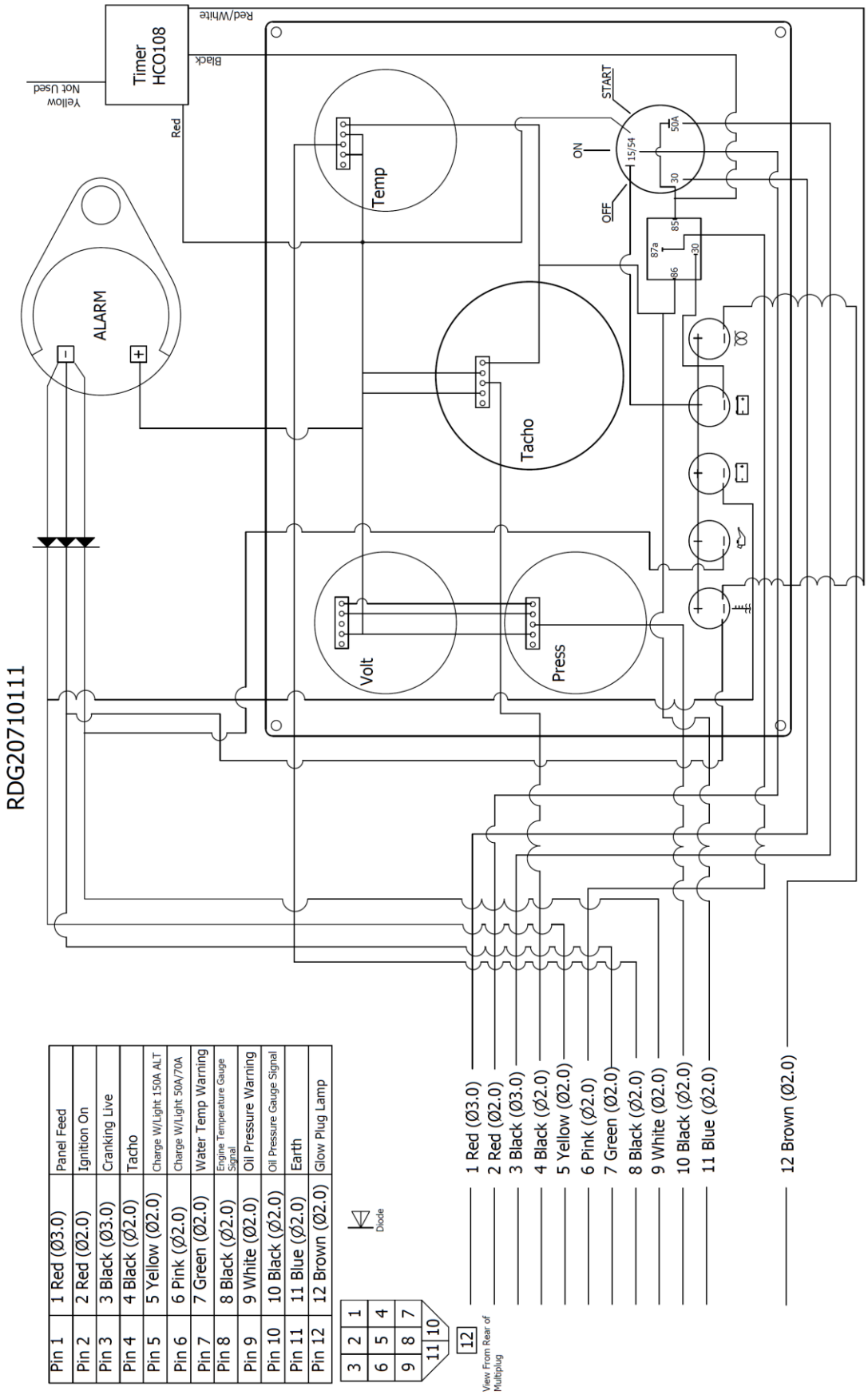

Pin 1	1 Red (Ø3.0)	Panel Feed
Pin 2	2 Red (Ø2.0)	Ignition On
Pin 3	3 Black (Ø3.0)	Cranking Live
Pin 4	4 Black (Ø2.0)	Tacho
Pin 5	5 Yellow (Ø2.0)	Charge W/Light 150A ALT
Pin 6	6 Pink (Ø2.0)	Charge W/Light 50A/70A
Pin 7	7 Green (Ø2.0)	Water Temp Warning
Pin 8	8 Black (Ø2.0)	Engine Temperature Gauge Signal
Pin 9	9 White (Ø2.0)	Oil Pressure Warning
Pin 10	10 Black (Ø2.0)	Oil Pressure Gauge Signal
Pin 11	11 Blue (Ø2.0)	Earth
Pin 12	12 Brown (Ø2.0)	Glow Plug Lamp

Figure 18: Deluxe Control Panel Wiring Diagram

4. 8kW Travel Power Wiring Diagram and Overall Dimensions

DANGER:

ELECTRIC SHOCK RISK! ALL HIGH VOLTAGE WIRING SYSTEMS SHOULD BE INSTALLED BY A QUALIFIED ELECTRICIAN.

Travel Power AC systems installed by qualified electrician and to BMEA code of practice for Electrical and Electronic installation in Boats: BS EN ISO 13297 (ac)

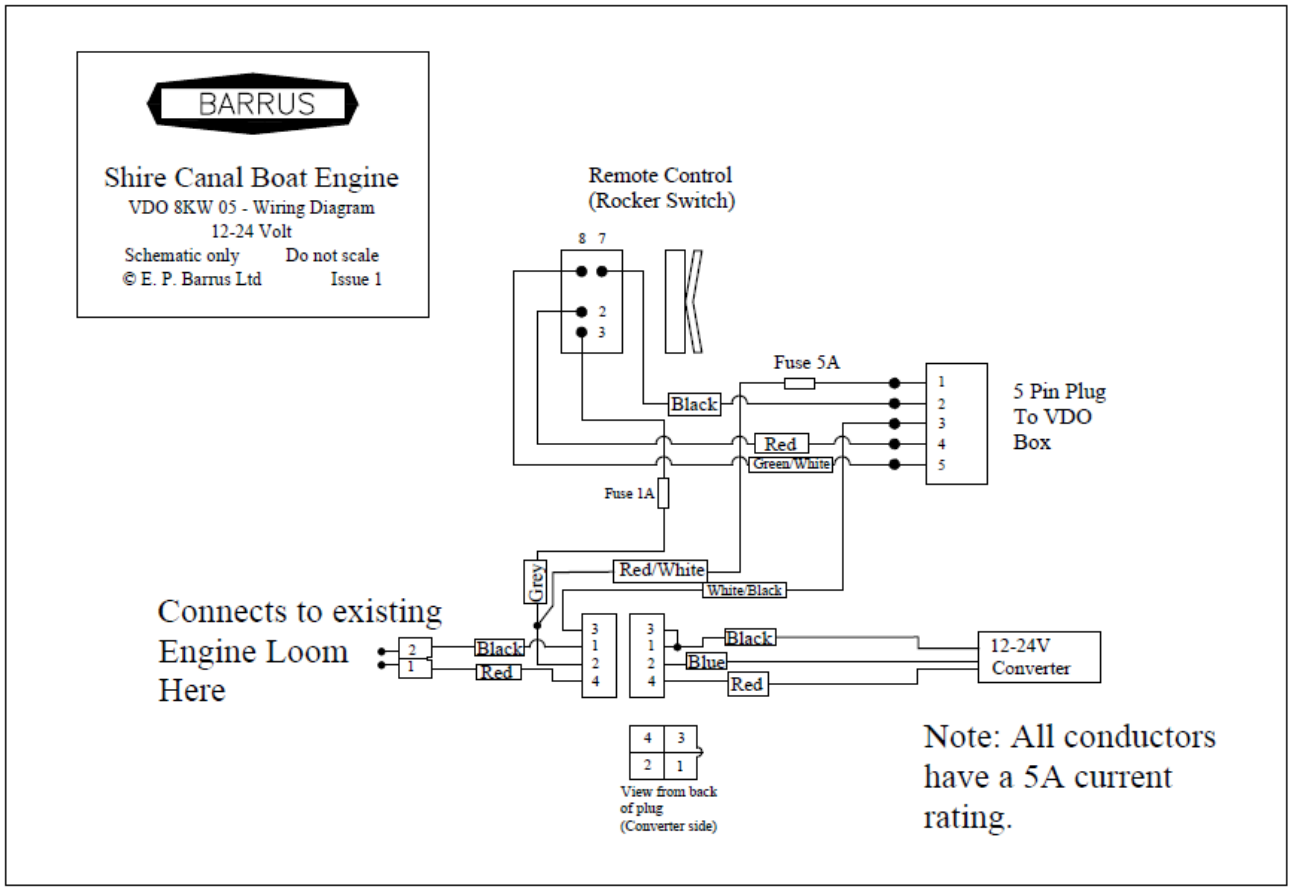

Figure 19: Travel Power wiring diagram

Figure 19 shows the 12/24 volt part of the wiring for the 8kW Travel Power system. For the 230 volt wiring diagram please refer to the Travel Power manual.

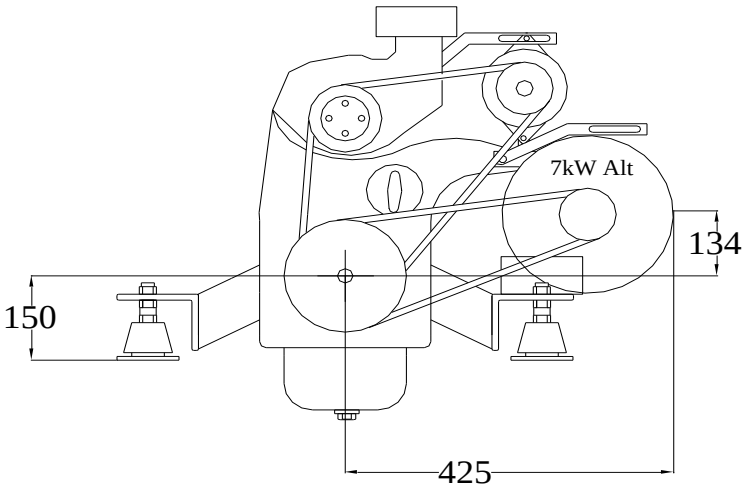

Figure 20: Shire 70 WB Travel Power dimensions

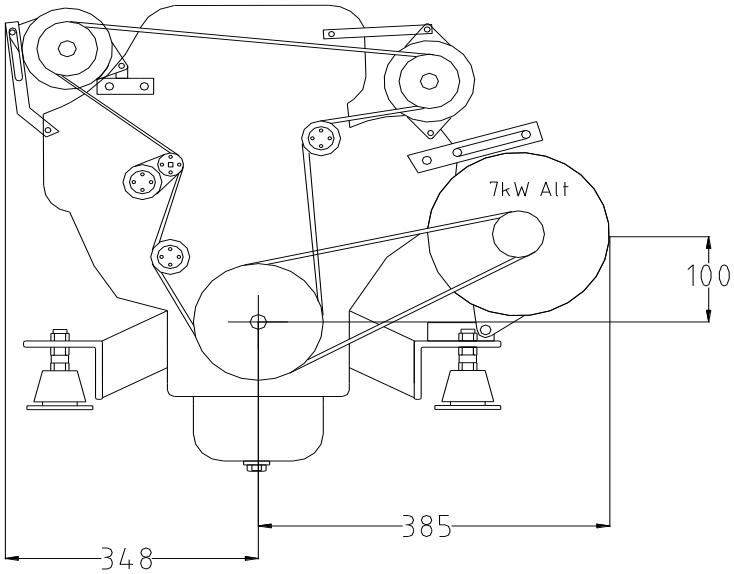

Figure 21: Shire 85 WB Travel Power Dimensions

5. 5kW Travel Power System

- This unit is energised by a 12v ignition operated supply. The installer can wire to a convenient plug on the existing loom for this purpose.
- When the 12v relay (RDG1396) is placed into the spare relay holder on the engine, the black two way plug is energised when the ignition is turned on.
- The wire colours in the plug are: Black – Earth
  Red – Live

SECTION 9 – Dealer List

Area	Company	Telephone	Email
BERKSHIRE	Bluenine Marine	01189 406482	bluenine@marine7957.fsnet.co.uk
	Driveline Marine	0118 942 3877	tam@drivelinemarine.com
	Marcus Marine Engineering Ltd (Servicing, Repairs & Breakdowns only)	07900890911	marcusmarine@icloud.com
CHESHIRE	Nantwich Canal Centre	01270 625122	info@nantwichcc.com
CORNWALL	Black Dog Marine	01503 265898	blackdogmarine@googlemail.com
	Cellar Marine	01326 280214	john@cellarmarine.com
	Smith's Boat Yard	01208 862815	info@smithsboatyard.co.uk
	Armada Engineering	01326 375566	sales@armadamh.co.uk
CUMBRIA	Windermere Aquatic Ltd	01539 442121	service@aquaticboatcentres.com
DERBYSHIRE	Midland Canal Centre	01283 701933	info@mccboats.co.uk
DEVON	Sleeman & Hawken Ltd	01626 778266	keith@sleeman-hawken.co.uk
	Tonto Marine	01803 844399	enquiries@tontomarine.co.uk
	Mobile Marine	01297 631821	mobilemarine@btconnect.com
	Darthaven Marina	01803 752242	admin@darthaven.co.uk
DORSET	Purbeck Marine	01202 686592	purbeckmarine@aol.com
	Rob Perry Marine	01297 631314	sales@robperrymarine.co.uk
EAST SUSSEX	Peter Leonard Marine	01273 515987	info@plmarine.com
ESSEX	French Marine Motors Ltd	01206 305233 01255 850303	info@frenchmarine.com
HAMPSHIRE	Marine Power Ltd	0238 0403918	info@marine-power.co.uk
HEREFORDSHIRE	Starline Marine	01684 593443	narrowboats@starline.demon.co.uk
HERTFORDSHIRE	P & S Marine	01923 248372	pandsmarinellp@gmail.com
LEICESTERSHIRE	Foxton Boat Services Ltd	01162 792285	tony@foxton-boats.freeserve.co.uk
NORFOLK	French Marine Motors Ltd	01603 722079	info@frenchmarine.com
NORTHAMPTON	Grand Junction Boat Co.	01604 858043	grandjunco@talk21.com
NOTTINGHAM	Farndon Marina	01636 705483	info@farndonmarina.co.uk
OXFORDSHIRE	Service Engine UK	01993 835157	info@serviceenginesuk.co.uk
SHROPSHIRE	Maestermyn (Marine) Ltd	01691 662424	enquiries@maestermyn.co.uk

STAFFORDSHIRE	JD Boat Services Ltd	01902 791811	jdboats@btinternet.com
	Stone Boatbuilding Company	01785 812688	sales@stonebuilding.co.uk
	Streethay Wharf	01543 414808	office@streethaywharf.co.uk
WARWICKSHIRE	Barry Hawkins Narrowboats	01827 711762	boats@hawkinsyard.freeserve.co.uk
	Onboard Energy	02476 393333	sales@onboardenergy.com
	Springwood Haven Leisure Ltd	0845 4566572	enquiries@springwoodhaven.co.uk
	Valley Boat Services Ltd	07990528123	enquiries@valleycruises.co.uk
WEST MIDLANDS	Stephen Goldsbrough Boats	01564 778210	andy@sgboats.com
WILTSHIRE	Foxhangers Marine	01380 828795	info@foxhangers.co.uk
WORCESTERSHIRE	J L Pinder & Son	01527 876438	sales@jlpinderandsons.co.uk
	Starline Narrowboats	01684 874774	narrowboats@starline.demon.co.uk
YORKSHIRE	Rodley Boat Centre	01132 576132	John.snowdenz@ntlworld.com
MONMOUTHSHIRE	Castle Narrowboats	01873 830001	castlenarrowboats@btinternet.com
SHETLAND	DH Marine (Shetland) Ltd	01595 690618	mail@dhmarine.co.uk
NORTHERN IRELAND	South Shore Marine	020 38341010	info@southshoremarine.co.uk
EIRE	Dun Laoghaire Marine Services	00353 12104776	info@dlms.ie
	O'Sullivans Marine	003536 67124524	brian@sulliansmarine.com
	Oysterhaven Boats	00353 214843626	sales@oysterhavenboats.com

SECTION 10 – Shire Parts

Model	70 WB	85 WB
Primary Fuel Filter	RDG9188346	RDG9188346
Secondary Fuel Filter	119802-55801	RE62418
Air Filter Element	RDG6613	-
Inner Air Filter Element	-	RDG6651
Outer Air Filter Element	-	RDG6650
Oil Filter	129150-35170	RE504836
3.5kW Alternator Belt	RDG0047600	RDG0047581
5kW Alternator Belt	RDG0047600	RDG6816
8kW Alternator Belt	RDG0047601	RDG6830
50A Alternator Belt	GB/T12732-1996	-
120A Alternator Belt	-	R123432
240A Alternator Belt	RDG0047511	-
50A 24V Alternator Belt	-	R500277
55A 24V Alternator Belt	-	RDG0047600
80A 24V Alternator Belt	-	RDG0047983
Belt Driven Sea Water Pump	-	RDG907A2
Impellor for Belt Driven Sea Water Pump	-	RDG010A2
Belt Driven Sea Water Pump Cover Plate “O” Ring	-	RDG003A23
Belt Driven Sea Water Pump Belt	-	RDG004A196
Crank Mounted Seawater Pump	RDG9079564	RDG9079564
Raw Water Pump Impellor for front crank mounted pump	RDG0109627	RDG1019627

Camshaft Mounted Seawater Pump	RDG907A7	RDG907A7
Raw Water Pump Impellor for front camshaft mounted pump	RDG010A4	RDG010A4

Control Panel:

Deluxe Control Panel	RDG20710111

Fuses & Relays

The electrical system is fitted with three or four blade type fuses:

1	Engine Stop Control System Fuse	40amp	RDG3246
2	Control Panel Supply Fuse	15amp	RDG3245
3	Engine Start Control System Fuse	15amp	RDG3245
4	Dash Panel Live (Sire 70 WB only)	15amp	RDG3245

Shire 70 WB Engine Oil:

Engine Oil is available from your Shire Dealer in convenient 5 litre containers (Part Number RDG6110).

Shire 85 WB Engine Oil and Coolant:

- Engine oil is available from Barrus in a 20 litre container. The part number is VC83070-020.
- Engine coolant (John Deere Cool Gard) is available from Barrus in a 20 litre container. The part number is EPH76215-020.

Diesel Fuel Additive:

Diesel fuel additive is available from your Shire Dealer in a handy 500ml container (Part No RDG80210219).

Shire Parts Book:

On the E.P Barrus Website there is a Shire Parts Book which has a more extensive list of parts available for your engine. To access the Shire Parts Books on the internet type the following short link into your search engine:

https://www.barrus.co.uk/shire-parts/

SECTION 11 - Declarations

1. Declaration of Conformity for Recreational Craft Propulsion Engine with the requirements of Directive 94/25/EC. (SHIRE 70WB)

Name of Engine Manufacturer: **Yanmar Co Ltd.**
Address: **Yanmar Europe B.V, Brugplein 11, 1332 BS Almere-de Vaart, Netherlands**

Name of Authorised Representative: **E.P.Barrus LTD**
Address: **E.P.Barrus LTD, Launton Road, Bicester, Oxon, OX26 4UR, England**

Engine type approved according to: Stage II of Directive 97/68/EC, 88/77/EC

Description of Engine(s) and Essential Requirements

Engine Type: Inboard Engine **Fuel Type**: Diesel **Combustion Cycle**: 4 Stroke

Identification of Engine(s) covered by this Declaration of Conformity

Engine Model	Engine Type	Engine Family code	Type Approval Certificate Number
Shire 70 WB	4 TNV 98 NSA	YD3300DNMGEC	E13*97/68GA*2001/63*0545*11

Essential Requirements	Standards	Other normative document/method.	Technical file	Specify in more detail *= Mandatory standard.
Annex 1.B- Exhaust Emissions				
B.1 Engine Identification	☐	☐	☐	
B.2 Exhaust emission requirements	☐*	☐	☐	* EN ISO 8178- 1:1996
B.3 Durability	☐	☐	☐	
B.4 Owners Manual	☐	☐	☐	ISO10240
Annex 1. C- Noise Emissions	See Declaration of Conformity of the craft in which the engine(s) has(have) been installed			

This declaration of conformity is issued under the sole responsibility of the manufacturer. I declare on behalf of the engine manufacturer that the engine(s) [is (are) in conformity with the type(s) for which above mentioned EC type-examination or type approval certificate(s) has (have) been issued and][1] will meet the exhaust emission requirements of Directive 94/25/EC as amended by Directive 2003/44/EC when installed in a recreational craft, in accordance with the engine manufacturer's supplied instructions and that this (these) engine(s) must not be put into service until the recreational craft which it is (they are) to be installed has been declared in conformity with the relevant provisions of the above mentioned Directives.

Tim Hart
Sales Director
Signed: Bicester, UK
Date: 01/03/2017

2. Declaration of Conformity for Recreational Craft Propulsion Engine with the requirements of Directive 94/25/EC. (SHIRE 85WB)

Name of Engine Manufacturer: **John Deere Power Systems**
Address: **Usine de Saran, B.P. 11013, 45401 Fleury-les-Aubrais Cedex, France**

Name of Authorised Representative: **E.P.Barrus LTD**
Address: **E.P.Barrus LTD, Launton Road, Bicester, Oxon, OX26 4UR, England**

Engine type approved according to: Stage II of Directive 97/68/EC, 88/77/EC

Description of Engine(s) and Essential Requirements

Engine Type: Inboard Engine **Fuel Type**: Diesel **Combustion Cycle**: 4 Stroke

Identification of Engine(s) covered by this Declaration of Conformity

Engine Model	Engine Type	Engine Family code	Type Approval Certificate Number
Shire 85 WB	4045DF270B	5JDXL04.5076	E11*97/68GA*2002/88*0219*00

Essential Requirements	Standards	Other normative document/method.	Technical file	Specify in more detail *= Mandatory standard.
Annex 1.B- Exhaust Emissions				
B.1 Engine Identification	☐	☐	☐	
B.2 Exhaust emission requirements	☐*	☐	☐	* EN ISO 8178- 1:1996
B.3 Durability	☐	☐	☐	
B.4 Owners Manual	☐	☐	☐	ISO10240
Annex 1. C- Noise Emissions	See Declaration of Conformity of the craft in which the engine(s) has(have) been installed			

This declaration of conformity is issued under the sole responsibility of the manufacturer. I declare on behalf of the engine manufacturer that the engine(s) [is (are) in conformity with the type(s) for which above mentioned EC type-examination or type approval certificate(s) has (have) been issued and][1] will meet the exhaust emission requirements of Directive 94/25/EC as amended by Directive 2003/44/EC when installed in a recreational craft, in accordance with the engine manufacturer's supplied instructions and that this (these) engine(s) must not be put into service until the recreational craft which it is (they are) to be installed has been declared in conformity with the relevant provisions of the above mentioned Directives.

Tim Hart
Sales Director
Signed: Bicester, UK
Date: 01/03/2017

SERVICE RECORD CARD

Model: .....

Engine No: .....

Carried out by E.P.Barrus **Print Name:** PDI **Actual Hours:** **Signed:**	**Boat Builder Stamp:** **Commission of Boat and Hand Over to Customer. (Refer to the Installation Check List Page in this Manual).** **Date:** **Signed:**
Dealer Stamp: 1st **Actual Hours:** **Signed:**	**Dealer Stamp:** 2nd **Actual Hours:** **Signed:**
Dealer Stamp: 3rd **Actual Hours:** **Signed:**	**Dealer Stamp:** 4th **Actual Hours:** **Signed:**
Dealer Stamp: 5th **Actual Hours:** **Signed:**	**Dealer Stamp:** 6th **Actual Hours:** **Signed:**

Please refer to Owner's Manual for service intervals