SHIRE®

WORKBOAT RANGE

THE FIRST BARRUS 100 YEARS

CELEBRATING OUR FIRST 100 YEARS, GEARING UP FOR THE NEXT.

SHIRE® Workboat Engine Range February 2017

Engine Range

Engine Model	15WB	20WB	25WB	30WB	30WBD	40WB	50WB	70WB	85WB	130WB
Cylinders	2	3	3	3	3	4	4	4	4	6
Horsepower	13.6	21	25	29	30	40	50	70	85	130
RPM	3600	3600	3000	3200	3000	2600	3000	2500	2500	2500
Cylinder CC	570	854	1266	1266	1331	2190	2190	3319	4500	6800
STANDARD SPECIFICATION										
Heat Exchanger Cooled	Standard	Standard	Standard	Standard	Standard	Standard	Standard	Standard	Standard	Standard
Manifold	Wet	Wet	Wet	Wet	Dry	Dry	Wet	Dry	Dry	Dry
Fresh and Sea Water Pumps	Standard	Standard	Standard	Standard	Standard	Standard	Standard	Standard	Standard	Standard
Water Injection Bend	Standard	Standard	Standard	Standard	Standard	Standard	Standard	Standard	Standard	Standard
12 Volt Electric Start	Standard	Standard	Standard	Standard	Standard	Standard	Standard	Standard	Standard	Standard
24 Volt Electrical Start	No	No	No	No	No	Option	Option	Option	Option	Option
Alternator (12 Volt)	125 Amp	125 Amp	125 Amp	125 Amp	50 Amp	50 Amp	50 Amp	50 Amp	120 Amp	120 Amp
Control Panel with Tacho	Standard	Standard	Standard	Standard	Standard	Standard	Standard	Deluxe	Deluxe	Deluxe
Air Cleaner/Silencer	Standard	Standard	Standard	Standard	Standard	Standard	Standard	Standard	Standard	Standard
Sump Drain Pump	Standard	Standard	Standard	Standard	Standard	Standard	Standard	Standard	Standard	Standard
Morse Type Connectors	Standard	Standard	Standard	Standard	Standard	Standard	Standard	Standard	Standard	Standard
Flex Mounts for Smooth Running	Standard	Standard	Standard	Standard	Standard	Standard	Standard	Standard	Standard	Standard
Flexible Fuel Lines	N/A	N/A	N/A	N/A	Standard	Standard	Standard	Standard	Standard	Standard
Remote Header Tank Kit	N/A	N/A	N/A	N/A	Standard	Standard	Standard	Standard	Standard	Standard
GEARBOX										
PRM 60 Mechanical	Standard	Standard	N/A	N/A	N/A	N/A	N/A	N/A	N/A	N/A
PRM 90 Mechanical	No	No	Standard	N/A	N/A	N/A	N/A	N/A	N/A	N/A
PRM 150 Hydraulic	Option	Option	N/A	Option	Option	Option	Option	N/A	N/A	N/A
TMC 60A Down Angle 7°	Option	Option	N/A	Option	Option	Option	Option	Standard	Standard	N/A
PRM 280 Hydraulic	N/A	N/A	N/A	N/A	N/A	Option	Option	Standard	Standard	N/A
PRM 500 Hydraulic	N/A	N/A	N/A	N/A	N/A	N/A	N/A	Option	Option	Standard

Price List

Engine Model	15WB	20WB	25WB	30WB	30WBD	40WB	50WB	70WB	85WB	130WB
With Standard Gearbox	**£4,222.00**	**£4,799.00**	**£5,465.00**	**£5,995.00**	**£5,095.00**	**£6,350.00**	**£6,695.00**	**£8,250.00**	**£9,495.00**	**£12,494.00**
With PRM 60 Gearbox	Standard	Standard	N/A	N/A	N/A	N/A	N/A	N/A	N/A	N/A
With PRM 90 Gearbox	N/A	N/A	Standard	**£5,482.00**	N/A	N/A	N/A	N/A	N/A	N/A
With PRM 150 Gearbox	**£4,879.00**	**£5,425.00**	N/A	Standard	Standard	Standard	Standard	N/A	N/A	N/A
With TMC 60A Gearbox	**£4,772.00**	**£5,332.00**	N/A	**£6,130.00**	N/A	N/A	N/A	N/A	N/A	N/A
With PRM 280 Gearbox	N/A	N/A	N/A	N/A	N/A	**£6,875.00**	**£7,220.00**	Standard	Standard	N/A
With PRM 500 Gearbox	N/A	N/A	N/A	N/A	N/A	N/A	N/A	**£8,589.00**	**£9,995.00**	Standard
Basic Panel Downgrade - Less	**£30**	**£30**	**£30**	**£30**	**£30**	**£30**	**£30**	**£30**	**£30**	**£30**
Deluxe Upgrade	**£150.00**	**£150.00**	**£150.00**	**£150.00**	**£150.00**	**£150.00**	**£150.00**	**£150.00**	Included	Included
Additional Extension Harness 3m	**£46.00**	**£46.00**	**£46.00**	**£46.00**	**£46.00**	**£46.00**	**£46.00**	**£46.00**	**£46.00**	**£46.00**
PTO Stub Shaft Crank Mounted	**£185.00**	**£185.00**	**£185.00**	**£185.00**	**£185.00**	**£185.00**	**£185.00**	**£185.00**	**£185.00**	**£185.00**
Single Lever Control Head (side mounted)	**£92.00**	**£92.00**	**£92.00**	**£92.00**	**£92.00**	**£92.00**	**£92.00**	**£92.00**	**£92.00**	**£92.00**
3 Metre Control Cable (x2)	**£19.00**	**£19.00**	**£19.00**	**£19.00**	**£19.00**	**£19.00**	**£19.00**	**£19.00**	**£19.00**	**£19.00**

OVER £250 WORTH OF "EXTRAS" INCLUDED IN OUR STANDARD PRICE.
OUR STANDARD "EXTRAS" INCLUDE:-

Remote coolant header tank | Flexible fuel line (2 x 1m) | Diesel fuel filter/water separator | Electric fuel lift pump | Engine oil | Engine coolant/anti-freeze | Stainless steel water injection exhaust elbow

BRITISH MARINE
LEADING THE INDUSTRY

E. P. Barrus Ltd., Launton Road, Bicester, Oxfordshire, OX26 4UR
Email: **sam.pearson@barrus.co.uk** or
shire.workboats@barrus.co.uk
Tel: 01869 363636 Fax: 01869 363673 **www.barrus.co.uk**

E. P. BARRUS LTD. reserve the right to change the specification and/or prices without prior notice.

THE FIRST BARRUS 100 YEARS

CELEBRATING OUR FIRST 100 YEARS, GEARING UP FOR THE NEXT.

Doc No. 3504

Shire 15 WB

Specifications

- 2 Cylinder Yanmar Marine Engine
- 13.6 hp @ 3600 rpm
- Displacement 570 cc
- 250 hour engine oil and filter change
- PRM60 Mechanical gearbox
- 125 amp 12V alternator
- Fully dyno tested
- Standard control panel with tacho and warning lights
- Long life heavy duty raw water pump
- 2 Year Warranty on engine and components
- 1 Year Warranty on all electrical components

Accessories Included

- Remote coolant header tank
- Engine oil
- Engine coolant / anti-freeze
- Stainless steel water injection exhaust elbow
- Engine oil sump pump
- Primary and secondary fuel filter set-up
- Electric stop solenoid

SHIRE

Additional Standard Specification

- Naturally aspirated, 2 cylinder, 4 cycle in-line water-cooled diesel
- 115 kg dry weight
- Fuel filter with water drain
- Easy access to service items from top of engine (filters, fuses, water pump)
- Morse 33C compatible engine speed and shift control connections
- Engine sump oil drain pump
- Electrical extension loom - 3 metres
- Heat exchanger water cooled exhaust manifold with stainless steel water injected elbow 50mm (2”) outlet
- Anti vibration mounts and adjusting screws
- Owners handbook
- 2 and 3D full CAD installation drawings available
- Delivered in box

Optional Accessories

- 7° down angle gearbox
- Basic control panel (warning lights only)
- Deluxe control panel (tacho, oil, pressure, coolant temp, voltage gauges)
- High flow crankshaft mounted seawater pump
- High riser mixing elbow
- Crank mounted stub shaft for PTO (size optional)
- Remote shift control and cables
- Gearbox ratio options
- Flexible output coupling
- Calorifier connections

Standard Control Panel

Dimensions

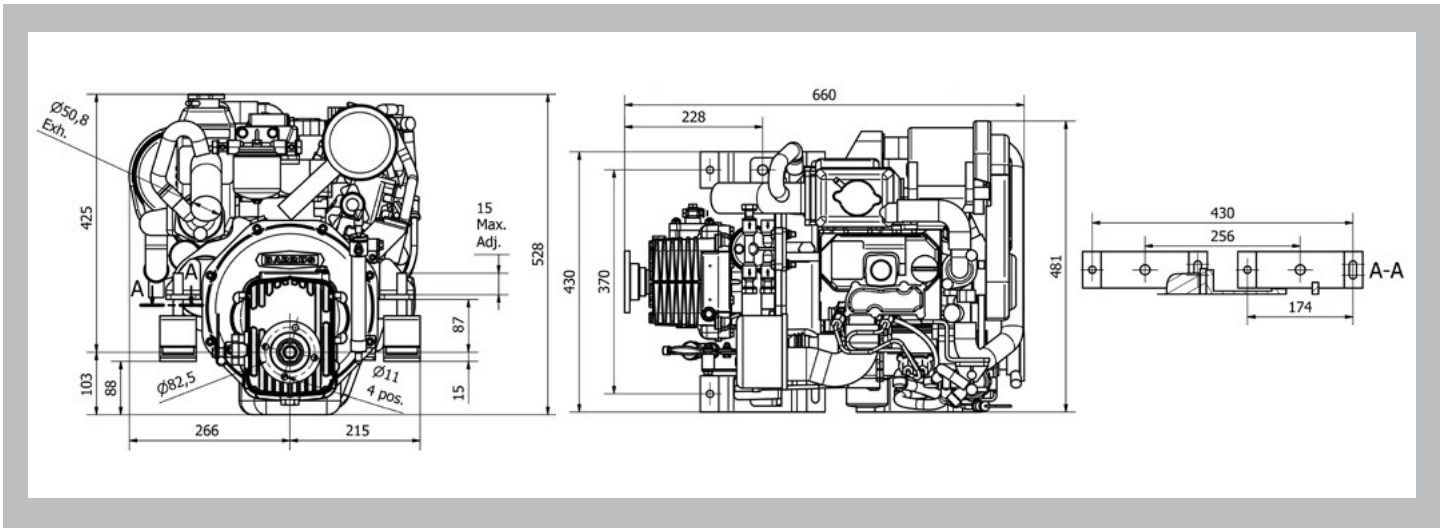

Dealer Stamp

E. P. Barrus Ltd., Launton Road, Bicester, Oxfordshire, OX26 4UR
Email: **sam.pearson@barrus.co.uk** or
shire.workboats@barrus.co.uk
Tel: 01869 363636 Fax: 01869 363673 **www.barrus.co.uk**

E. P. BARRUS LTD. reserve the right to change the specification and/or prices without prior notice.

BRITISH MARINE
LEADING THE INDUSTRY

THE FIRST BARRUS 100 YEARS

CELEBRATING OUR FIRST 100 YEARS, GEARING UP FOR THE NEXT.

Doc No. 3504

Shire 20 WB

Specifications

- 3 Cylinder Yanmar Marine Engine
- 21 hp @ 3600 rpm
- Displacement 854 cc
- 250 hour engine oil and filter change period
- PRM60 Mechanical gearbox
- 125 amp 12V alternator
- Fully dyno tested
- Standard control panel with tacho and warning lights
- Long life heavy duty raw water pump
- 2 Year Warranty on engine and components
- 1 Year Warranty on all electrical components

Accessories Included

- Remote coolant header tank
- Engine oil
- Engine coolant / anti-freeze
- Stainless steel water injection exhaust elbow
- Engine oil sump pump
- Primary and secondary fuel filter set-up
- Electric stop solenoid

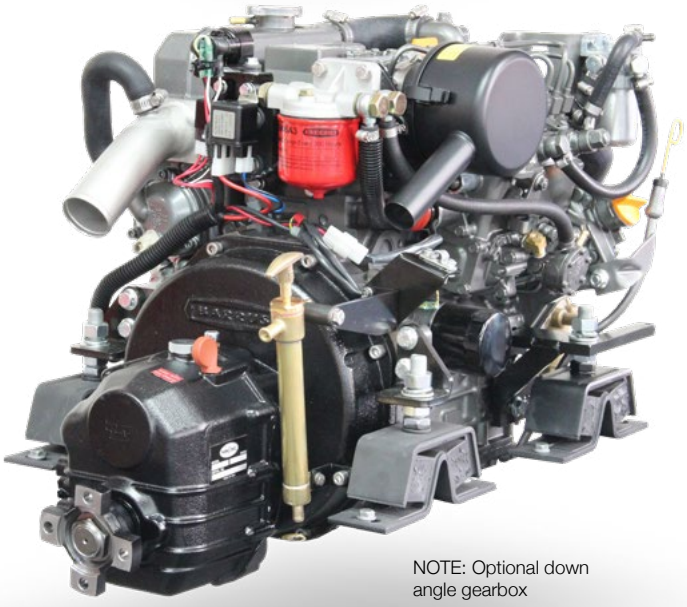

NOTE: Optional down angle gearbox

SHIRE

Additional Standard Specification

- Naturally aspirated, 3 cylinder, 4 cycle inline water-cooled diesel
- 120 kg dry weight
- Fuel filter with water drain
- Easy access to service items from top of engine (filters, fuses, water pump)
- Morse 33C compatible engine speed and shift control connections
- Electrical extension loom - 3 metres
- Heat exchanger water cooled exhaust manifold with stainless steel water injected elbow 50mm (2”) outlet
- Anti vibration mounts and adjusting screws
- Owners handbook
- 2 and 3D full CAD installation drawings available
- Delivered in box

Optional Accessories

- 7° down angle gearbox
- Basic control panel (warning lights only)
- Deluxe control panel (tacho, oil, pressure, coolant temp, voltage gauges)
- High flow crankshaft mounted seawater pump
- Crank mounted stub shaft for PTO (size optional)
- Remote shift control and cables
- Gearbox ratio options
- Flexible output coupling
- Calorifier connections

Standard Control Panel

Dimensions

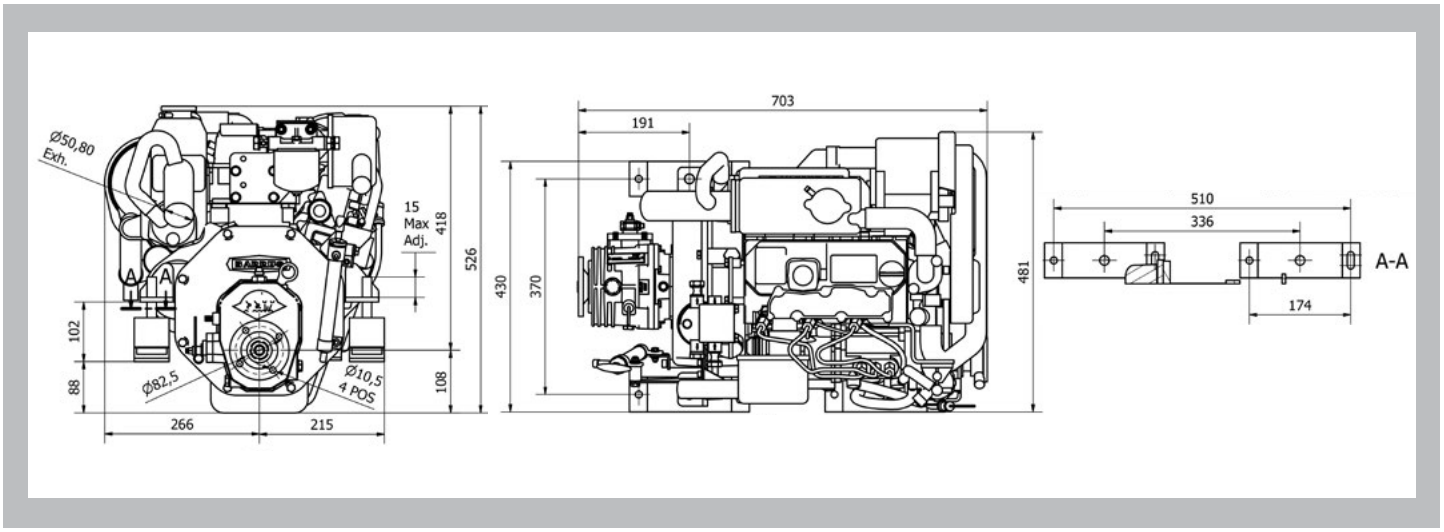

Dealer Stamp

E. P. Barrus Ltd., Launton Road, Bicester, Oxfordshire, OX26 4UR
Email: **sam.pearson@barrus.co.uk** or
shire.workboats@barrus.co.uk
Tel: 01869 363636 Fax: 01869 363673 **www.barrus.co.uk**

E. P. BARRUS LTD. reserve the right to change the specification and/or prices without prior notice.

BRITISH MARINE
LEADING THE INDUSTRY

THE FIRST BARRUS 100 YEARS

CELEBRATING OUR FIRST 100 YEARS, GEARING UP FOR THE NEXT.

Doc No. 3504

Shire 25 WB

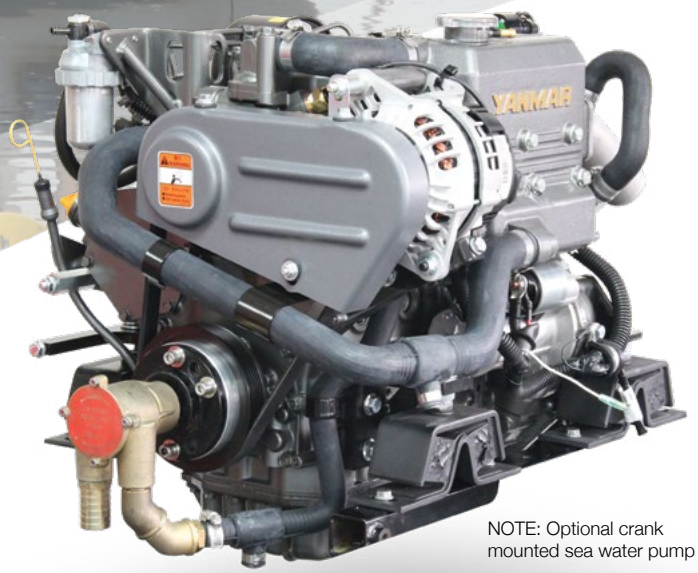

NOTE: Optional crank mounted sea water pump

Specifications

- 3 Cylinder Yanmar Marine Engine
- 25 hp @ 3000 rpm
- Displacement 1266 cc
- 250 hour engine oil and filter change period
- PRM90 Mechanical gearbox
- 125 amp 12V alternator
- Fully dyno tested
- Standard control panel with tacho and warning lights
- Long life heavy duty raw water pump
- 2 Year Warranty on engine and components
- 1 Year Warranty on all electrical components

Accessories Included

- Remote coolant header tank
- Engine oil
- Engine coolant / anti-freeze
- Stainless steel water injection exhaust elbow
- Engine oil sump pump
- Primary and secondary fuel filter set-up
- Electric stop solenoid

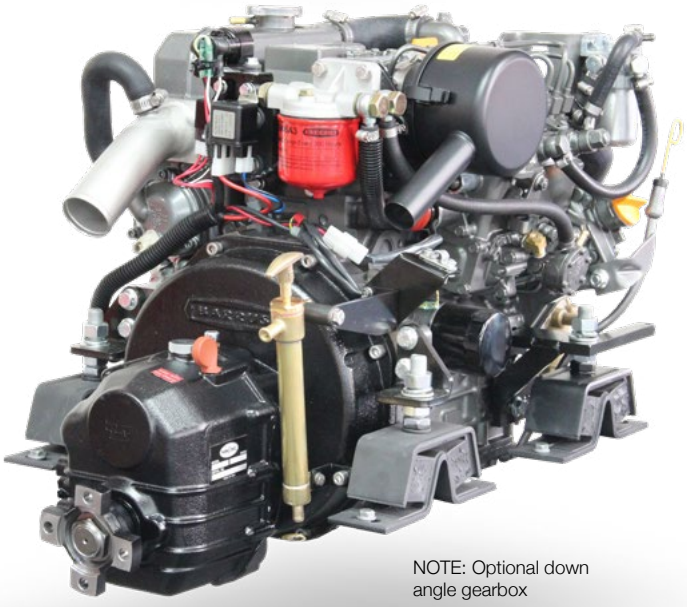

NOTE: Optional down angle gearbox

SHIRE

Additional Standard Specification

- Naturally aspirated, 3 cylinder, 4 cycle inline water-cooled diesel
- 139 kg dry weight
- Fuel filter with water drain
- Easy access to service items from top of engine (filters, fuses, water pump)
- Morse 33C compatible engine speed and shift control connections
- Electrical extension loom - 3 metres
- Heat exchanger water cooled exhaust manifold with stainless steel water injected elbow 50mm (2”) outlet
- Owners handbook
- 2 and 3D full CAD installation drawings available
- Delivered in a box

Optional Accessories

- 7˚ down angle gearbox
- Basic control panel (warning lights only)
- Deluxe control panel (tacho, oil, pressure, coolant temp, voltage gauges)
- High flow crankshaft mounted seawater pump
- High riser mixing elbow
- Crank mounted stub shaft for PTO (size optional)
- Remote shift control and cables
- Gearbox ratio options
- Flexible output coupling
- Calorifier connections

Standard Control Panel

Dimensions

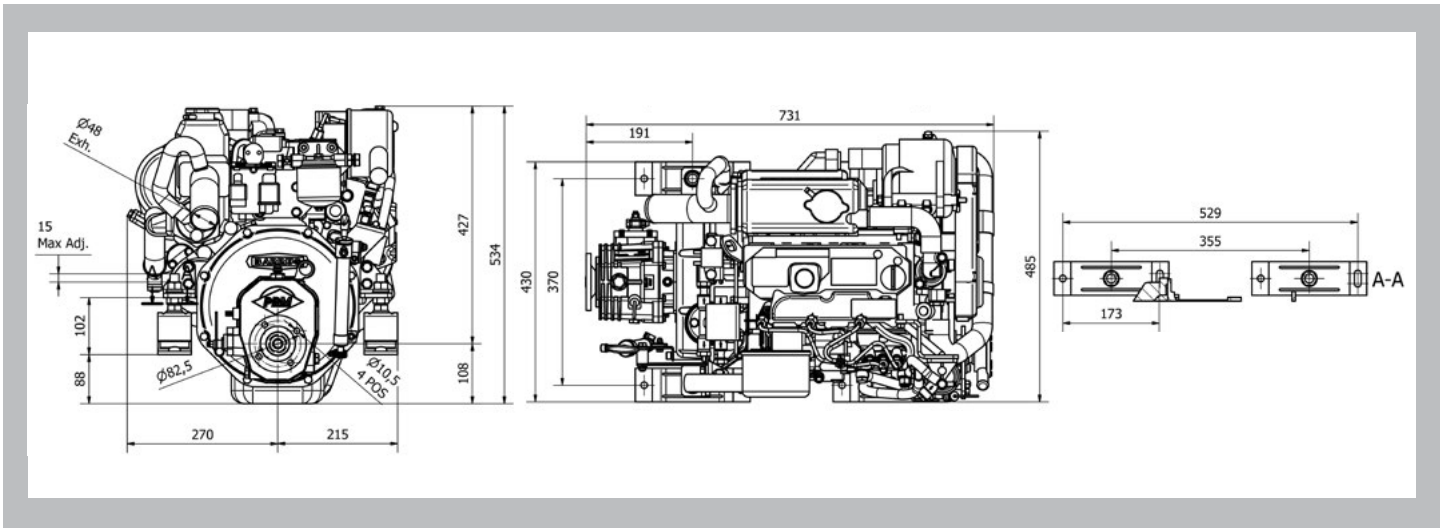

Dealer Stamp

E. P. Barrus Ltd., Launton Road, Bicester, Oxfordshire, OX26 4UR
Email: **sam.pearson@barrus.co.uk** or
shire.workboats@barrus.co.uk
Tel: 01869 363636 Fax: 01869 363673 **www.barrus.co.uk**

E. P. BARRUS LTD. reserve the right to change the specification and/or prices without prior notice.

BRITISH MARINE
LEADING THE INDUSTRY

THE FIRST BARRUS 100 YEARS

CELEBRATING OUR FIRST 100 YEARS, GEARING UP FOR THE NEXT.

Doc No. 3504

Shire 30 WB

Specifications

- 3 Cylinder Yanmar Marine Engine
- 29 hp @ 3200 rpm
- Displacement 1266 cc
- 250 hour engine oil and filter change period
- PRM150 Hydraulic gearbox
- 12V 125 amp alternator
- Fully dyno tested
- Standard control panel with tacho and warning lights
- Long life heavy duty raw water pump
- 2 Year Warranty commercial engine and components
- 1 Year Warranty commercial all electrical components

Accessories Included

- Remote coolant header tank
- Engine oil
- Engine coolant / anti-freeze
- Stainless steel water injection exhaust elbow
- Electric stop solenoid
- Engine oil sump pump
- Primary and secondary fuel filter set-up

SHIRE

Additional Standard Specification

- Naturally aspirated, 3 cylinder, 4 cycle inline water-cooled diesel
- 153 kg dry weight
- Fuel filter with water drain
- Easy access to service items from top of engine (filters, anodes, fuses, water pump)
- Morse 33C compatible engine speed and shift control connections
- Electrical extension loom - 3 metres
- Heat exchanger water cooled exhaust manifold with stainless steel water injected elbow 50mm (2”) outlet
- Anti vibration mounts and adjusting screws
- Owners handbook
- 2 and 3D full CAD installation drawings available
- Delivered in box

Optional Accessories

- 7° down angle gearbox
- Basic panel (warning lights only)
- Deluxe control panel (tacho, oil, pressure, coolant temp, voltage gauges)
- High flow crankshaft mounted seawater pump
- Crank mounted stub shaft for PTO (size optional)
- Crank mounted stub shaft for PTO (size optional)
- Remote shift control and cables
- Gearbox ratio options
- Flexible output coupling
- Calorifier connections
- Additional belt

Standard Control Panel

Dimensions

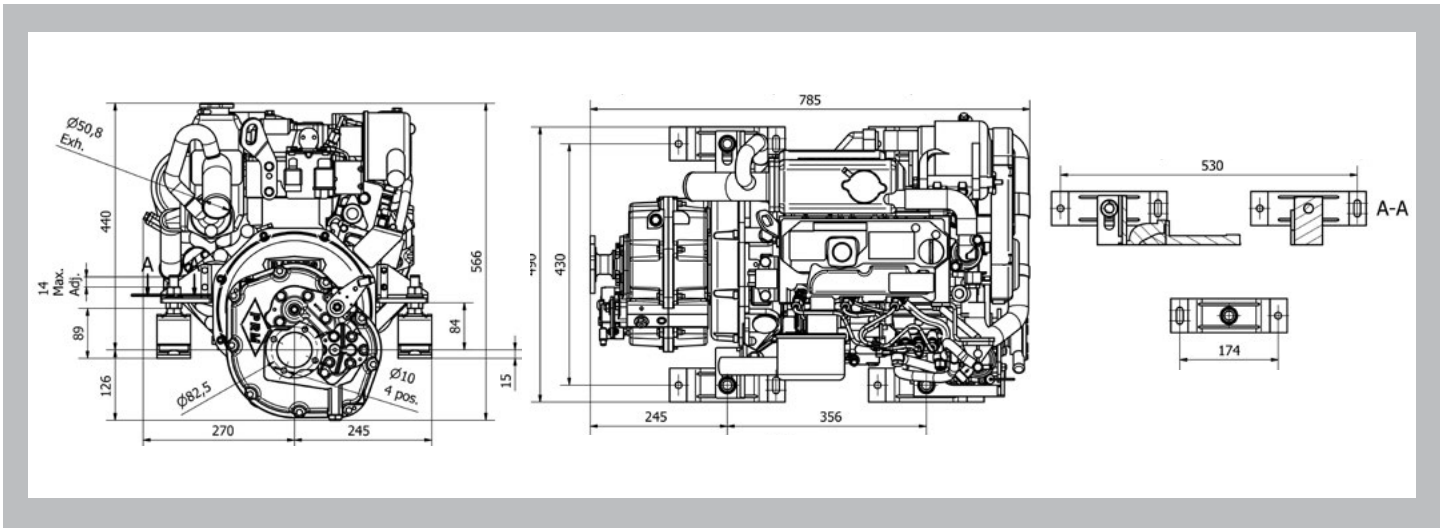

Dealer Stamp

E. P. Barrus Ltd., Launton Road, Bicester, Oxfordshire, OX26 4UR
Email: **sam.pearson@barrus.co.uk** or
shire.workboats@barrus.co.uk
Tel: 01869 363636 Fax: 01869 363673 **www.barrus.co.uk**

E. P. BARRUS LTD. reserve the right to change the specification and/or prices without prior notice.

BRITISH MARINE
LEADING THE INDUSTRY

THE FIRST BARRUS 100 YEARS

CELEBRATING OUR FIRST 100 YEARS, GEARING UP FOR THE NEXT.

Doc No. 3504

Shire 30 WBD

Specifications

- 3 Cylinder Propulsion Engine
- Yanmar 3TNV Base Engine
- 30 hp @ 3000 rpm
- Displacement 1331 cc
- 250 hour oil and filter change period
- PRM150 Mechanical gearbox
- 50 amp 12V alternator
- Fully dyno tested
- Control panel with warning lights
- 3 Year Warranty on engine and components
- 1 Year Warranty on all electrical components

Accessories Included

Remote coolant header tank

Flexible fuel line (2 x 1m)

Diesel fuel filter / water separator

Electric fuel lift pump

Engine oil

Engine coolant / anti-freeze

Stainless steel water injection exhaust elbow

SHIRE

YANMAR

Additional Standard Specification

- Naturally aspirated, 3 cylinder, 4 cycle inline water-cooled diesel
- 153 kg dry weight
- Fuel filter with water drain
- Full size replaceable air filter for maximum filtration and noise reduction
- Easy access to service items from top of engine (filters, anodes, fuses, water pump)
- Morse 33C compatible engine speed and shift control connections
- Engine sump oil drain pump
- Electrical extension loom - 2.3 metres
- Heat exchanger water cooled exhaust manifold with stainless steel water injected elbow 50mm (2”) outlet
- Anti vibration mounts and adjusting screws
- Owners handbook
- 2 and 3D full CAD installation drawings available
- Delivered on standard euro pallet

Optional Accessories

- Crank mounted stub shaft for PTO (size optional)
- Seawater strainer
- Remote shift control and cables
- Gearbox ratio options
- Flexible output coupling
- Various prop and stern gear components
- Calorifier connections
- Additional belt
- Hydraulic drive system

Standard Control Panel

Dimensions

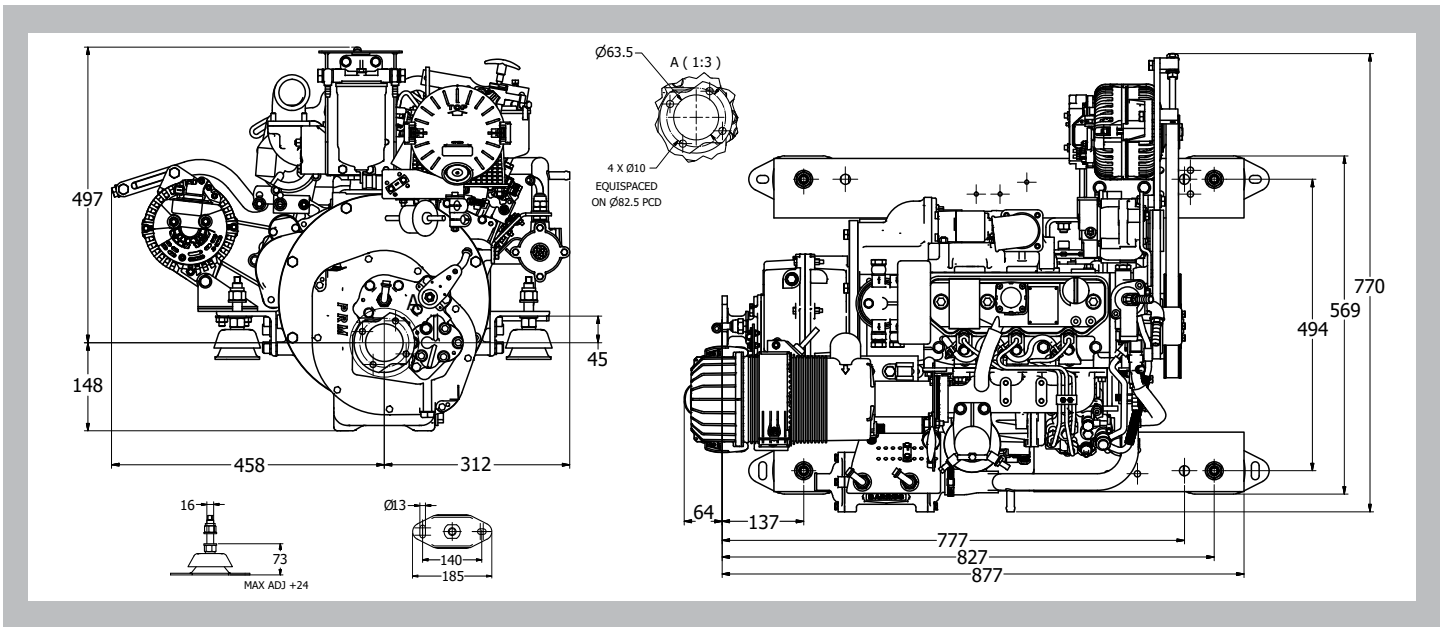

Dealer Stamp

E. P. Barrus Ltd., Launton Road, Bicester, Oxfordshire, OX26 4UR
Email: **sam.pearson@barrus.co.uk** or
shire.workboats@barrus.co.uk
Tel: 01869 363636 Fax: 01869 363673 **www.barrus.co.uk**

E. P. BARRUS LTD. reserve the right to change the specification and/or prices without prior notice.

BRITISH MARINE
LEADING THE INDUSTRY

THE FIRST BARRUS 100 YEARS

CELEBRATING OUR FIRST 100 YEARS, GEARING UP FOR THE NEXT.

Doc No. 3504

Shire 39 WB

Specifications

- 3 Cylinder Yanmar Marine Engine
- 39 hp @ 3000 rpm
- Displacement 1642 cc
- 250 hour engine oil and filter change period
- PRM150 Hydraulic gearbox
- 12V 125 amp alternator
- Fully dyno tested
- Standard control panel with tacho and warning lights
- 2 Year Warranty commercial engine and components
- 1 Year Warranty commercial all electrical components

Accessories Included

- Remote coolant header tank
- Engine oil
- Engine coolant / anti-freeze
- Stainless steel water injection exhaust elbow
- Electric stop solenoid
- Engine oil sump pump
- Primary and secondary fuel filter set-up

SHIRE

Additional Standard Specification

- Naturally aspirated, 3 cylinder, 4 cycle inline water-cooled diesel
- 225 kg dry weight
- Fuel filter with water drain
- Easy access to service items from top of engine (filters, fuses, water pump)
- Morse 33C compatible engine speed and shift control connections
- Electrical extension loom - 3 metres
- Heat exchanger water cooled exhaust manifold with stainless steel water injected elbow 76mm (3") outlet diameter
- Anti vibration mounts and adjusting screws
- Owners handbook
- 2 and 3D full CAD installation drawings available
- Delivered in box

Optional Accessories

- 7° down angle gearbox
- Basic panel (warning lights only)
- Deluxe control panel (tacho, oil, pressure, coolant temp, voltage gauges)
- High flow crankshaft mounted seawater pump
- Crank mounted stub shaft for PTO (size optional)
- Remote shift control and cables
- Gearbox ratio options
- Flexible output coupling
- Calorifier connections
- Additional belt

Standard Control Panel

Dimensions

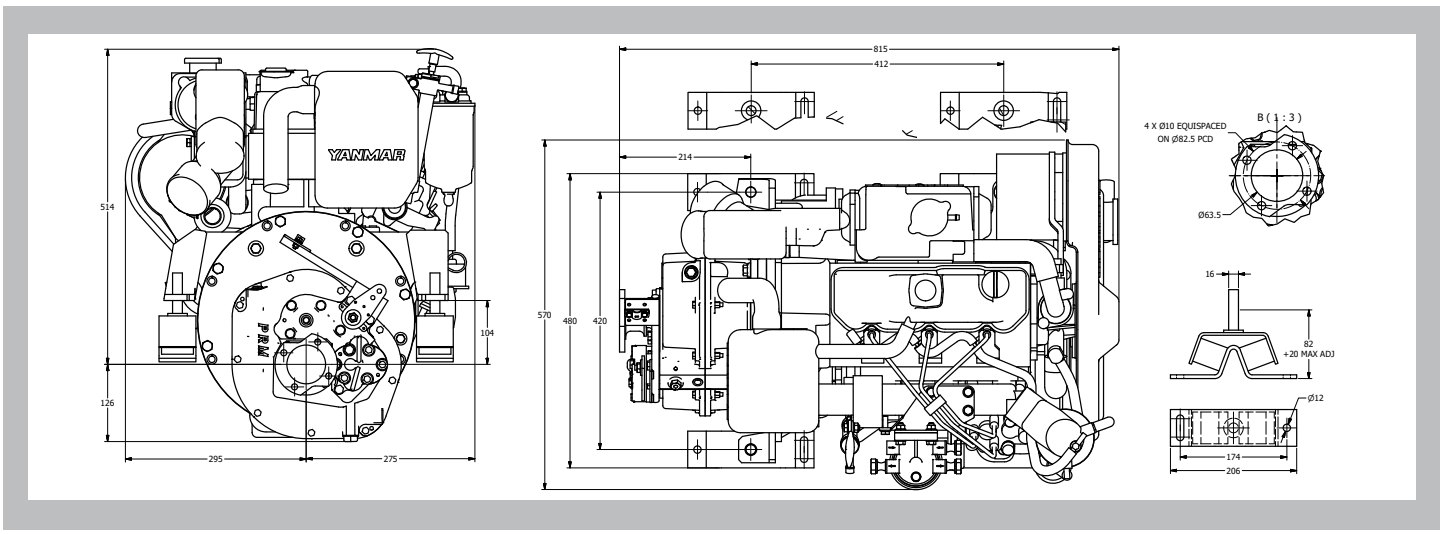

Dealer Stamp

E. P. Barrus Ltd., Launton Road, Bicester, Oxfordshire, OX26 4UR
Email: **sam.pearson@barrus.co.uk** or
shire.workboats@barrus.co.uk
Tel: 01869 363636 Fax: 01869 363673 **www.barrus.co.uk**

E. P. BARRUS LTD. reserve the right to change the specification and/or prices without prior notice.

BRITISH MARINE
LEADING THE INDUSTRY

THE FIRST BARRUS 100 YEARS

CELEBRATING OUR FIRST 100 YEARS, GEARING UP FOR THE NEXT.

Doc No. 3504

Shire 40 WB

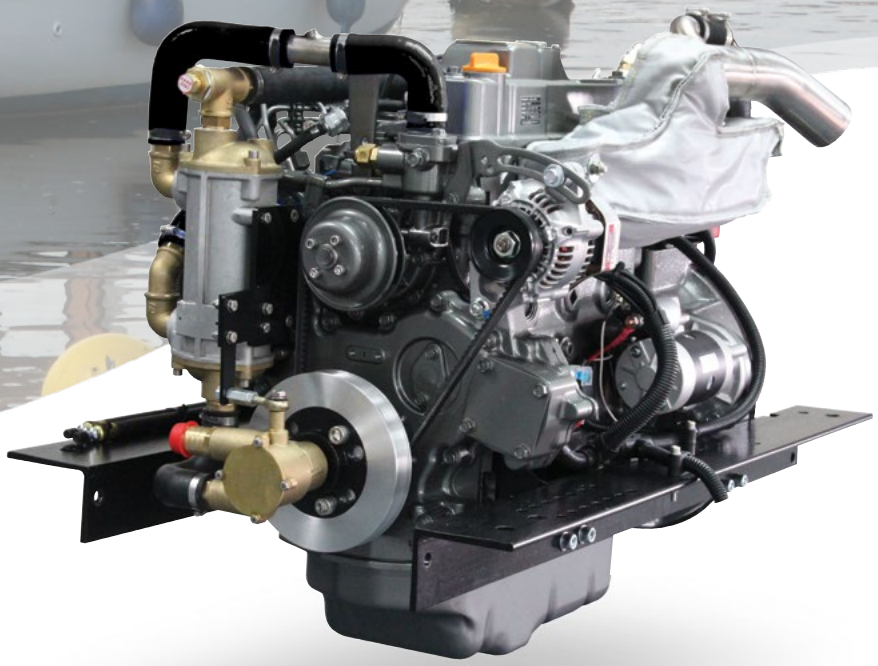

Specifications

- 4 Cylinder Propulsion Engine
- Yanmar 4TNV Base Engine
- 40 hp @ 2600 rpm
- Displacement 2190 cc
- 250 hour oil and filter change period
- PRM150 Hydraulic gearbox
- 50 amp 12V alternator
- Fully dyno tested
- Control panel with warning lights
- 3 Year Warranty on engine and components
- 1 Year Warranty on all electrical components

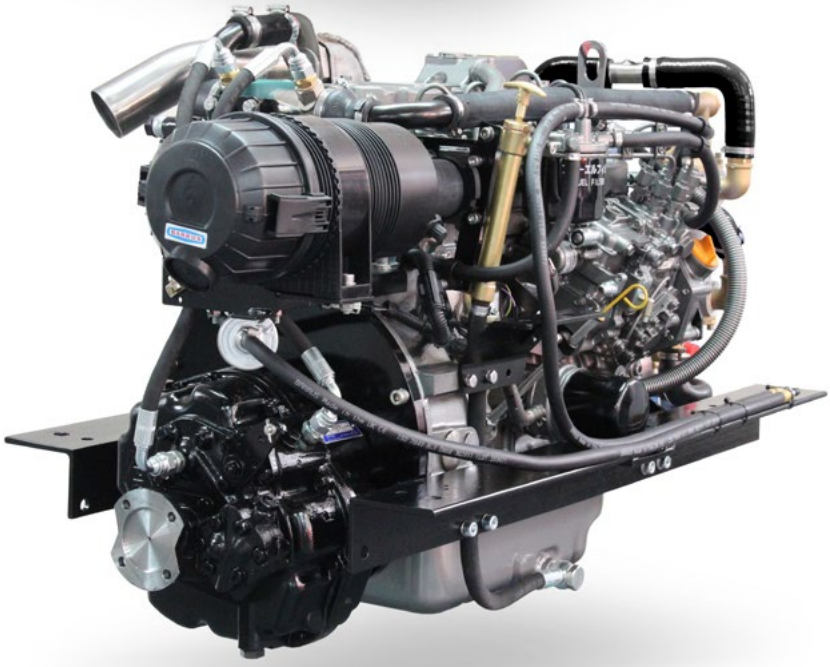

Accessories Included

Remote coolant header tank

Flexible fuel line (2 x 1m)

Diesel fuel filter / water separator

Electric fuel lift pump

Engine oil

Engine coolant / anti-freeze

Stainless steel water injection exhaust elbow

SHIRE

Additional Standard Specification

- Naturally aspirated, 4 cylinder, 4 cycle in-line water-cooled diesel
- 270 kg dry weight
- Full size replaceable air filter for maximum filtration and noise reduction
- 50 amp 12V alternator
- Engine driven raw water pump
- Easy access to service items from top of engine (filters, anodes, fuses, water pump)
- Morse 33C compatible engine speed and shift control connections
- Engine sump oil drain pump
- Electrical extension loom - 2.3 metres
- Basic control panel with warning lights and tachometer and hour meter
- Anti vibration mounts and adjusting screws
- PK6 crankshaft pulley providing a drive for additional pump, alternator etc.
- Owners handbook
- 3 years warranty on engine and components
- 1 year warranty on all electrical components
- 2 and 3D full CAD installation drawings available
- Delivered on standard euro pallet

Optional Accessories

- PTO for rail mounted items
- Crank mounted stub shaft for PTO (32mm)
- SAE 9T gear driven PTO, at 0.9 engine speed
- Deluxe control panel, which includes specification of basic panel with additional oil pressure, water temp, gauges and voltmeter
- Seawater strainer
- Remote shift control and cables
- Gearbox ratio options
- Flexible output coupling
- Various prop and stern gear components
- Calorifier connections
- Gearbox upgrade
- 70 amp alternator
- Domestic travel power up to 5kW 230V
- Hydraulic drive system

Standard Control Panel

Dimensions

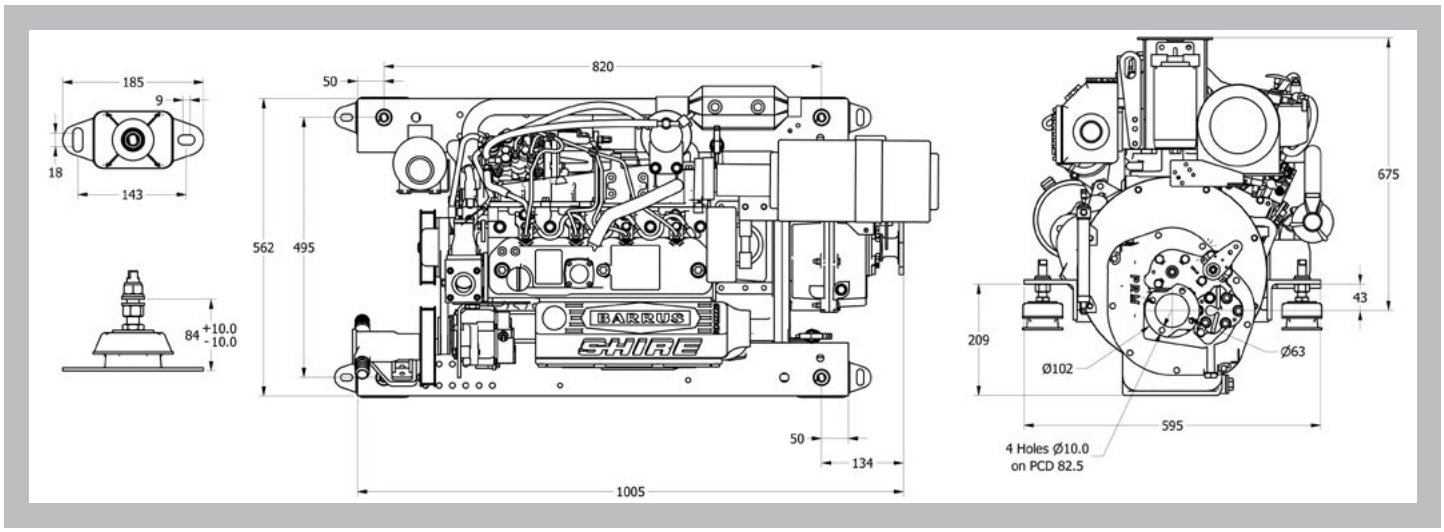

Dealer Stamp

E. P. Barrus Ltd., Launton Road, Bicester, Oxfordshire, OX26 4UR
Email: **sam.pearson@barrus.co.uk** or
shire.workboats@barrus.co.uk
Tel: 01869 363636 Fax: 01869 363673 **www.barrus.co.uk**

E. P. BARRUS LTD. reserve the right to change the specification and/or prices without prior notice.

BRITISH MARINE
LEADING THE INDUSTRY

THE FIRST BARRUS 100 YEARS

CELEBRATING OUR FIRST 100 YEARS, GEARING UP FOR THE NEXT.

Doc No. 3504

Shire 50 WB

Specifications

- 4 Cylinder Propulsion Engine
- Yanmar 4TNV Base Engine
- 50 hp @ 3000 rpm
- Displacement 2190 cc
- 250 hour oil and filter change period
- PRM150 Hydraulic gearbox
- 50 amp 12V alternator
- Fully dyno tested
- Control panel with warning lights
- 3 Year Warranty on engine and components
- 1 Year Warranty on all electrical components

Accessories Included

Remote coolant header tank

Flexible fuel line (2 x 1m)

Diesel fuel filter / water separator

Electric fuel lift pump

Engine oil

Engine coolant / anti-freeze

Stainless steel water injection exhaust elbow

SHIRE

Additional Standard Specification

- Naturally aspirated, 4 cylinder, 4 cycle inline water-cooled diesel
- 284 kg dry weight
- Full size replaceable air filter for maximum filtration and noise reduction
- Engine driven raw water pump
- Easy access to service items from top of engine (filters, anodes, fuses, water pump)
- Flexible fuel lines, comply with ISO 7840
- Morse 33C compatible engine speed and shift control connections
- Engine sump oil drain pump
- Electrical extension loom - 2.3 metres
- Anti vibration mounts and adjusting screws
- PK6 crankshaft pulley providing a drive for additional pump, alternator etc.
- Owners handbook
- 3 years warranty on engine and components
- 1 year warranty on all electrical components
- 2 and 3D full CAD installation drawings available
- Delivered on standard euro pallet

Optional Accessories

- PTO for rail mounted items
- Crank mounted stub shaft for PTO (32mm)
- SAE 9T gear driven PTO, at 0.9 engine speed
- Deluxe control panel, which includes specification of basic panel with additional oil pressure, water temp, gauges and voltmeter
- Seawater strainer
- Remote shift control and cables
- Gearbox ratio options
- Flexible output coupling
- Various prop and stern gear components
- Calorifier connections
- Gearbox upgrade
- 70 amp alternator
- Domestic travel power up to 5 kW / 230V
- Hydraulic drive system

Standard Control Panel

Dimensions

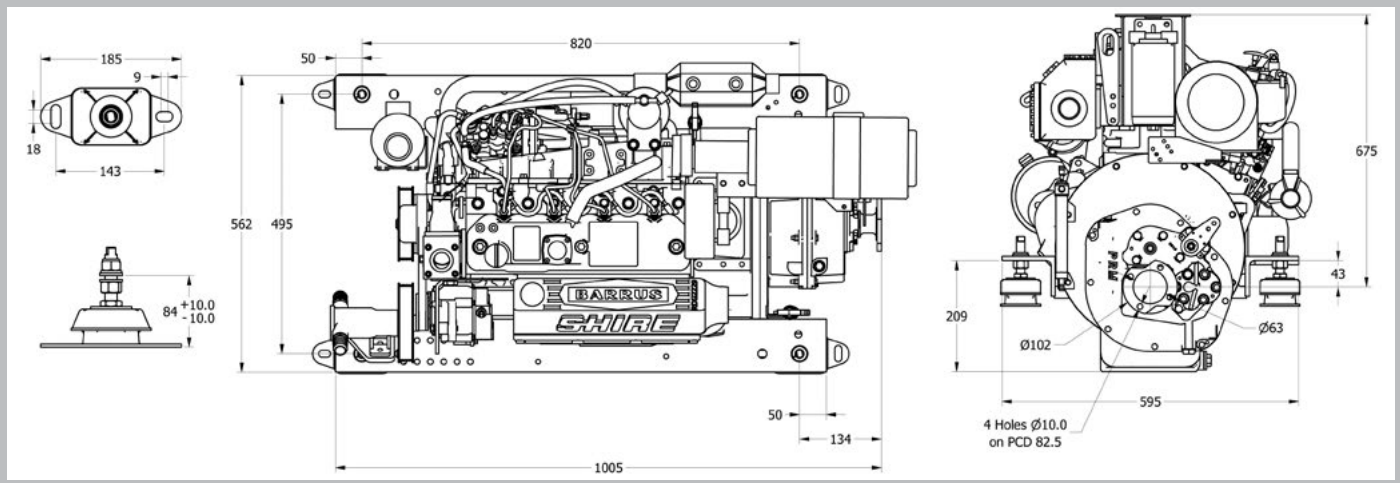

Dealer Stamp

E. P. Barrus Ltd., Launton Road, Bicester, Oxfordshire, OX26 4UR
Email: **sam.pearson@barrus.co.uk** or
shire.workboats@barrus.co.uk
Tel: 01869 363636 Fax: 01869 363673 **www.barrus.co.uk**

E. P. BARRUS LTD. reserve the right to change the specification and/or prices without prior notice.

BRITISH MARINE
LEADING THE INDUSTRY

THE FIRST BARRUS 100 YEARS

CELEBRATING OUR FIRST 100 YEARS, GEARING UP FOR THE NEXT.

Doc No. 3504

Shire 70 WB

Specifications

- 4 cylinder propulsion engine
- Yanmar 4TNV base engine
- 70 hp @ 2500 rpm
- Displacement 3319 cc
- 250 hour oil and filter change period
- PRM260 hydraulic gearbox
- 50 amp 12V alternator
- Fully dyno tested
- Deluxe panel
- 3 Year Warranty on engine and components
- 1 Year Warranty on all electrical components

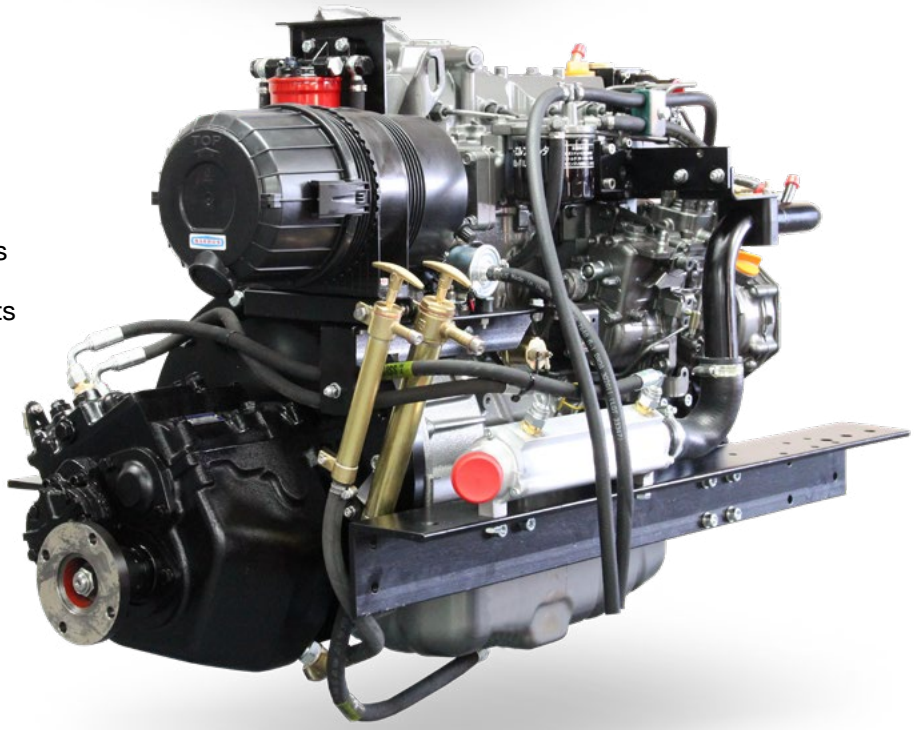

Accessories Included

Remote coolant header tank

Flexible fuel line (2 x 1m)

Diesel fuel filter / water separator

Electric fuel lift pump

Engine oil

Engine coolant / anti-freeze

Stainless steel water injection exhaust elbow

SHIRE

Additional Standard Specification

- Naturally aspirated, 4 cylinder, 4 cycle inline water-cooled diesel
- Yanmar 4TNV98-N base engine
- 2:1 ratio
- 400 kg dry weight
- Fuel prefilter with water drain
- Full size replaceable air filter for maximum filtration and noise reduction
- Engine driven raw water pump
- Easy access to service items from top of engine (filters, anodes, fuses, water pump)
- Flexible fuel lines, comply with ISO 7840
- Morse 33C compatible engine speed and shift control connections
- Engine and gearbox sump oil drain pumps
- Electrical extension loom - 2.3 metres
- Dry exhaust manifold with stainless steel water injected elbow
- Anti vibration mounts and adjusting screws
- Bulkhead mounted coolant bottle, hoses and clips
- PK6 crankshaft pulley providing a drive for additional pump, alternator etc.
- Owners handbook
- 2 and 3D full CAD installation drawings available
- Full range of accessories
- Delivered on standard euro pallet

Optional Accessories

- PTO for rail mounted items
- Crank mounted stub shaft to customers spec
- SAE 9T gear driven PTO, at 0.9 engine speed
- Seawater strainer
- Remote shift control and cables
- Gearbox ratio options
- Flexible output coupling
- Various prop and stern gear components
- Calorifier connections
- Gearbox upgrade
- 70 amp alternator
- Domestic travel power up to 5kW 230V

Deluxe Control Panel

Dimensions

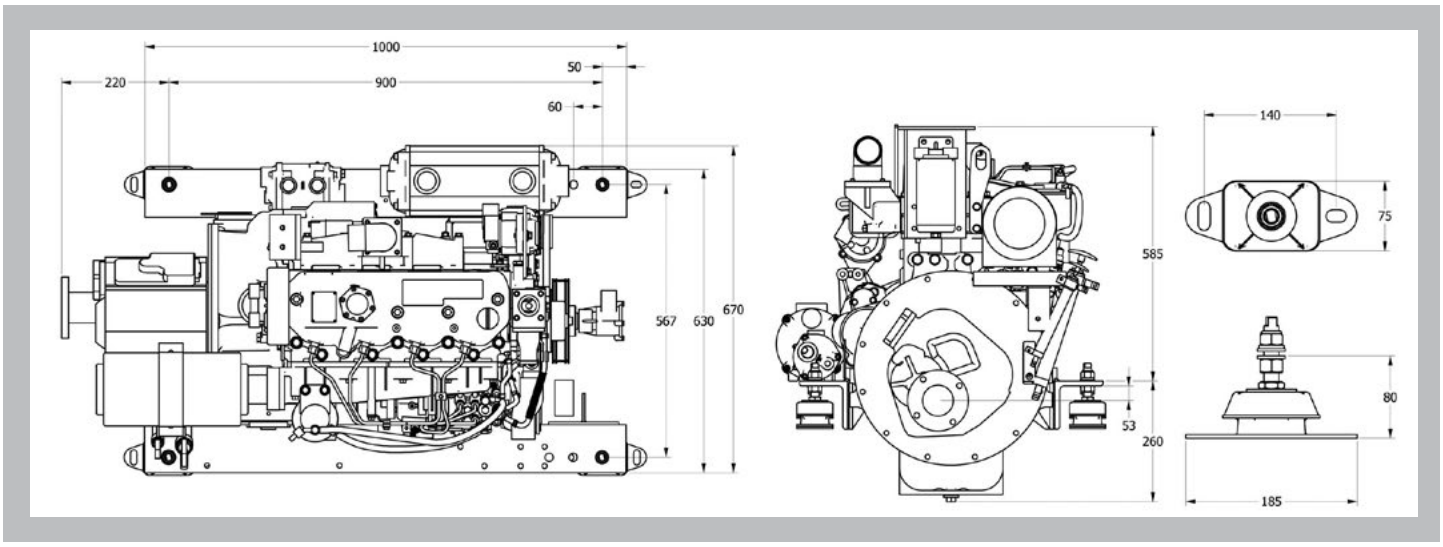

Dealer Stamp

E. P. Barrus Ltd., Launton Road, Bicester, Oxfordshire, OX26 4UR
Email: **sam.pearson@barrus.co.uk** or
shire.workboats@barrus.co.uk
Tel: 01869 363636 Fax: 01869 363673 **www.barrus.co.uk**

E. P. BARRUS LTD. reserve the right to change the specification and/or prices without prior notice.

BRITISH MARINE
LEADING THE INDUSTRY

THE FIRST BARRUS 100 YEARS

CELEBRATING OUR FIRST 100 YEARS, GEARING UP FOR THE NEXT.

Doc No. 3504

Shire 85 WB

Specifications

- 4 Cylinder Propulsion Engine
- John Deere Base Engine
- 85 hp @ 2500 rpm
- Displacement 4500 cc
- 370 hour oil and filter change period
- PRM260 Hydraulic gearbox
- 120 amp 12V alternator
- Fully dyno tested
- Deluxe control panel
- 3 Year Warranty on engine
- 1 Year Warranty on all electrical components

Accessories Included

Remote coolant header tank

Flexible fuel line (2 x 1m)

Diesel fuel filter / water separator

Engine oil

Engine coolant / anti-freeze

Stainless steel water injection exhaust elbow

SHIRE

JOHN DEERE

Additional Standard Specification

- Naturally aspirated, 4 cylinder, 4 cycle inline water-cooled diesel
- John Deere 4045 DF 270 base engine
- 545 kg dry weight
- Full size replaceable air filter for maximum filtration and noise reduction
- Easy access raw water pump
- Easy access to service items from top of engine (filters, anodes, fuses, water pump)
- Morse 33C compatible engine speed and shift control connections
- Engine sump oil drain pump
- Electrical extension loom - 2.3 metres
- Anti vibration mounts and adjusting screws
- Owners handbook
- 3 years warranty on engine
- 1 year warranty on all electrical components
- 2 and 3D full CAD installation drawings available
- Full range of accessories
- Delivered on standard euro pallet
- Engine oil and filter change period 370 hours using original John Deere Plus 50 oil and filter
- Gearbox oil sump pump

Optional Accessories

- Crank mounted stub shaft for PTO (size optional)
- Remote shift control and cables
- Gearbox ratio options
- Flexible output coupling
- Various prop and stern gear components
- Calorifier connections
- 24 volt electrics
- PRM 500 gearbox
- Gearbox driven P.T.O (on PRM500)
- PK6 crankshaft pulley providing a drive for additional pump, alternator etc.
- Domestic travel power up to 5kW 230V
- Hydraulic Drive System

Deluxe Control Panel

Dimensions

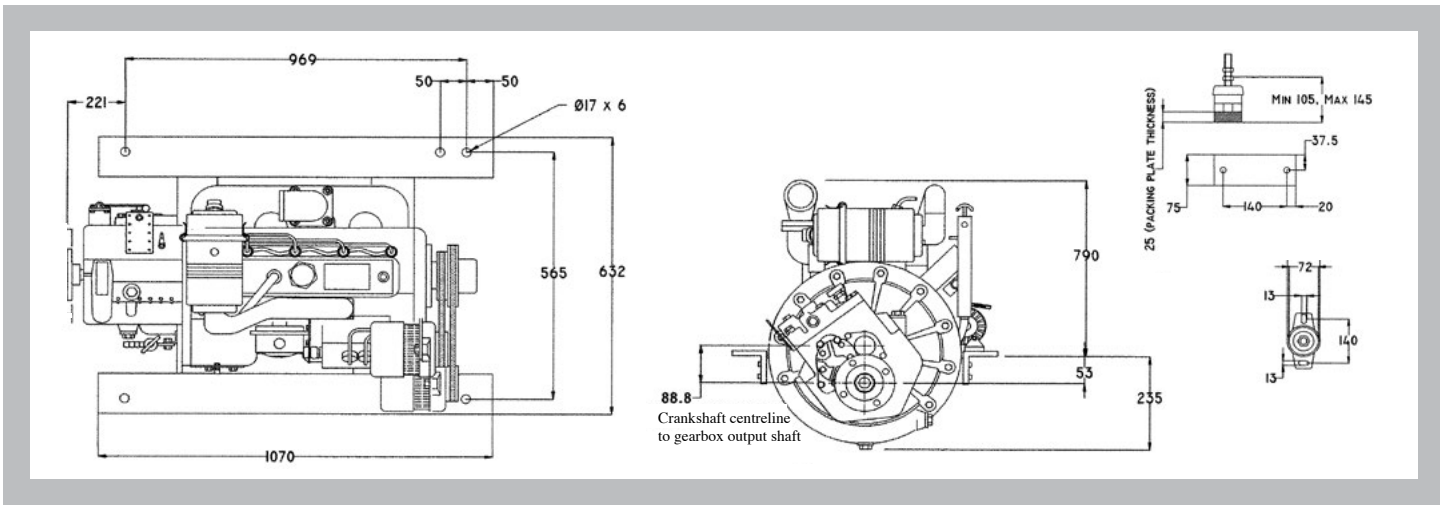

Dealer Stamp

E. P. Barrus Ltd., Launton Road, Bicester, Oxfordshire, OX26 4UR
Email: **sam.pearson@barrus.co.uk** or
shire.workboats@barrus.co.uk
Tel: 01869 363636 Fax: 01869 363673 **www.barrus.co.uk**

E. P. BARRUS LTD. reserve the right to change the specification and/or prices without prior notice.

BRITISH MARINE
LEADING THE INDUSTRY

THE FIRST BARRUS 100 YEARS

CELEBRATING OUR FIRST 100 YEARS, GEARING UP FOR THE NEXT.

Doc No. 3504

Shire 130 WB

NOTE: Engine fitted with optional PTO stub shaft

Specifications

- 6 Cylinder Propulsion Engine
- John Deere Base Engine
- 130 hp @ 2500 rpm
- Displacement 6800 cc
- 370 hour oil and filter change period
- PRM500 Hydraulic gearbox
- 120 amp 12V alternator
- Fully dyno tested
- Deluxe control panel
- 3 Year Warranty on engine
- 1 Year Warranty on all electrical components

Accessories Included

Remote coolant header tank

Flexible fuel line (2 x 1m)

Diesel fuel filter / water separator

Engine oil

Engine coolant / anti-freeze

Stainless steel water injection exhaust elbow

SHIRE

JOHN DEERE

Additional Standard Specification

- Naturally aspirated, 6 cylinder, 4 cycle inline water-cooled diesel
- John Deere 6068 DF 150 base engine
- 845 kg dry weight
- Full size replaceable air filter for maximum filtration and noise reduction
- Easy access raw water pump
- Easy access to service items from top of engine (filters, anodes, fuses, water pump)
- Morse 33C compatible engine speed and shift control connections
- Engine sump oil drain pump
- Electrical extension loom - 2.3 metres
- Anti vibration mounts and adjusting screws
- Owners handbook
- 3 years warranty on engine
- 1 year warranty on all electrical components
- 2 and 3D full CAD installation drawings available
- Full range of accessories
- Delivered on wooden pallet
- Engine oil and filter change period 370 hours using original John Deere Plus 50 oil and filter
- Gearbox oil sump pump

Optional Accessories

- PTO for rail mounted items
- Crank mounted stub shaft for PTO (size optional)
- Remote shift control and cables
- Gearbox ratio options
- Flexible output coupling
- Various prop and stern gear components
- Calorifier connections
- 24 volt electrics
- Gearbox driven P.T.O
- PK6 crankshaft pulley providing a drive for additional pump, alternator etc.
- Upgrade gearbox
- Domestic travel power up to 5kW 230V

Deluxe Control Panel

Dimensions

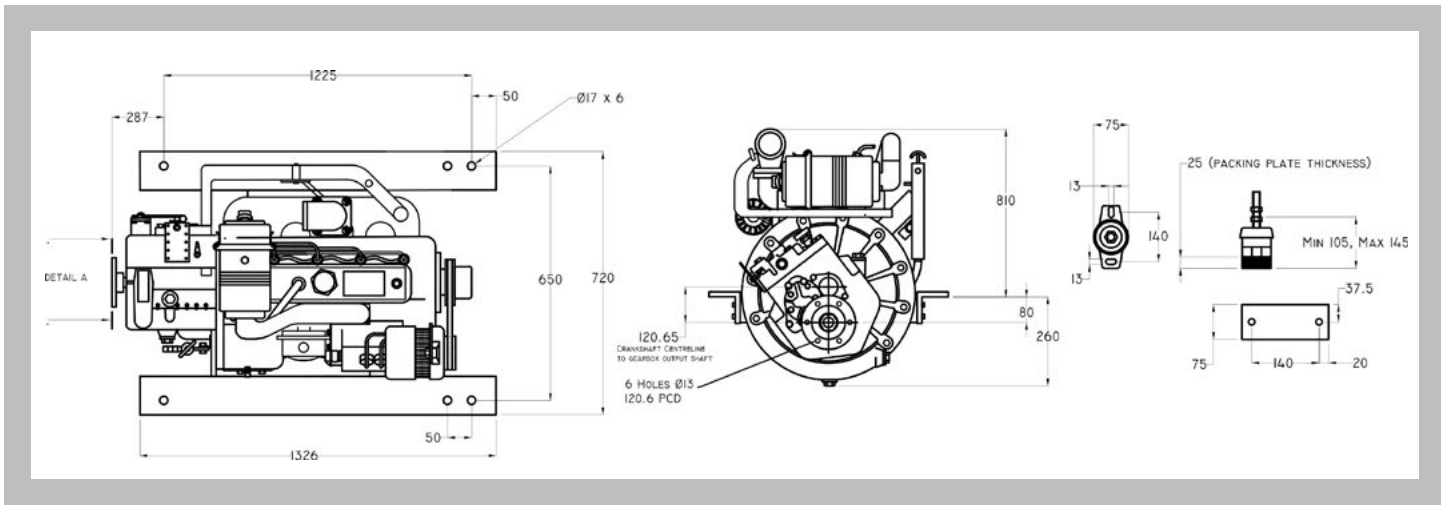

Dealer Stamp

E. P. Barrus Ltd., Launton Road, Bicester, Oxfordshire, OX26 4UR
Email: **sam.pearson@barrus.co.uk** or **shire.workboats@barrus.co.uk**
Tel: 01869 363636 Fax: 01869 363673 **www.barrus.co.uk**

E. P. BARRUS LTD. reserve the right to change the specification and/or prices without prior notice.

BRITISH MARINE LEADING THE INDUSTRY

THE FIRST BARRUS 100 YEARS

CELEBRATING OUR FIRST 100 YEARS, GEARING UP FOR THE NEXT.

Doc No. 3504