LONCIN 隆鑫

General Power Products

Gasoline Engine

LC2V78

Owner's Manual

www.loncinengine.com

Loncin motor co.,ltd.

Thank you for your purchasing Loncin Engine.

Please keep this manual in proper place so as to read it for reference at any time.

Take this manual as a part of the engine. If the engine is resold, it is required to transfer the engine with the manual.

Loncin abides by the continuous development strategy; therefore, Loncin reserves the right of modification of product and revision of the manual without any notice.

Copy right© Chongqing Loncin Industrial Co., Ltd.All rights reserve.

It is prohibited from reproducing, transferring, distributing and memorizing any content in the manual without obtaining a written approval from Loncin General-purpose Engine Co in advance.

Contents

1.Safety.....2
2.Parts and component names.....3
3.Use of engine.....4
Engine switch.....4
Choke button.....4
Regulator lever.....4
Engine oil protecting system.....5
4. Check before operation.....6
Routine inspection.....6
Check engine oil.....6
Check air cleaner.....7
5.Start engine…….....8
6.Stop engine.....10
7.Maintenance
Maintenance schedule.....11
Replace crank case oil.....12
Maintain air cleaner.....13
Spark plug.....14
Regulate idle speed.....14
8. Engine storage.....15
9.Troubleshoot.....16
10.Battery.....19
11.Engine parameters.....20
12.Wiring diagram.....21

1. Safety

Consumers' responsibility

- Before operating the engine, it is required to read the manual carefully and understand it, otherwise hurt to body or damage to engine may occur.
- Be familiar with controlling and operating the engine and emergency stop, it is only allowed to operate the engine by authorized person.
- Children are not allowed to operate the engine on no account and children and pets must be far away from the operating site.。

Caution for filling fuel

- Petrol has an extreme inflammability. Fill fuel in opening air and in good ventilation condition, the engine is stopped.
- Prohibit smoking, keep flame away from naked flame and spark while filling fuel.
- Do not start engine while the splashed petrol drips remain.

Hot exhaust

- When the engine works, the muffler is heated to high temperature, even the engine stopped after a while. Be careful to keep your hand beyond the touch with the muffler. Do not store the engine in room till it is cool.
- To prevent fire, keep the engine 1m away from the wall or other devices. And of course, the inflammable substance should be placed further away from the working engine.

Carbon monoxide intoxication

- The emission from the engine contains toxic carbon monoxide, avoid absorbing the emission in.
- Do not operate the engine in enclosed cabinet or in poor ventilation condition.

2. Part and component names

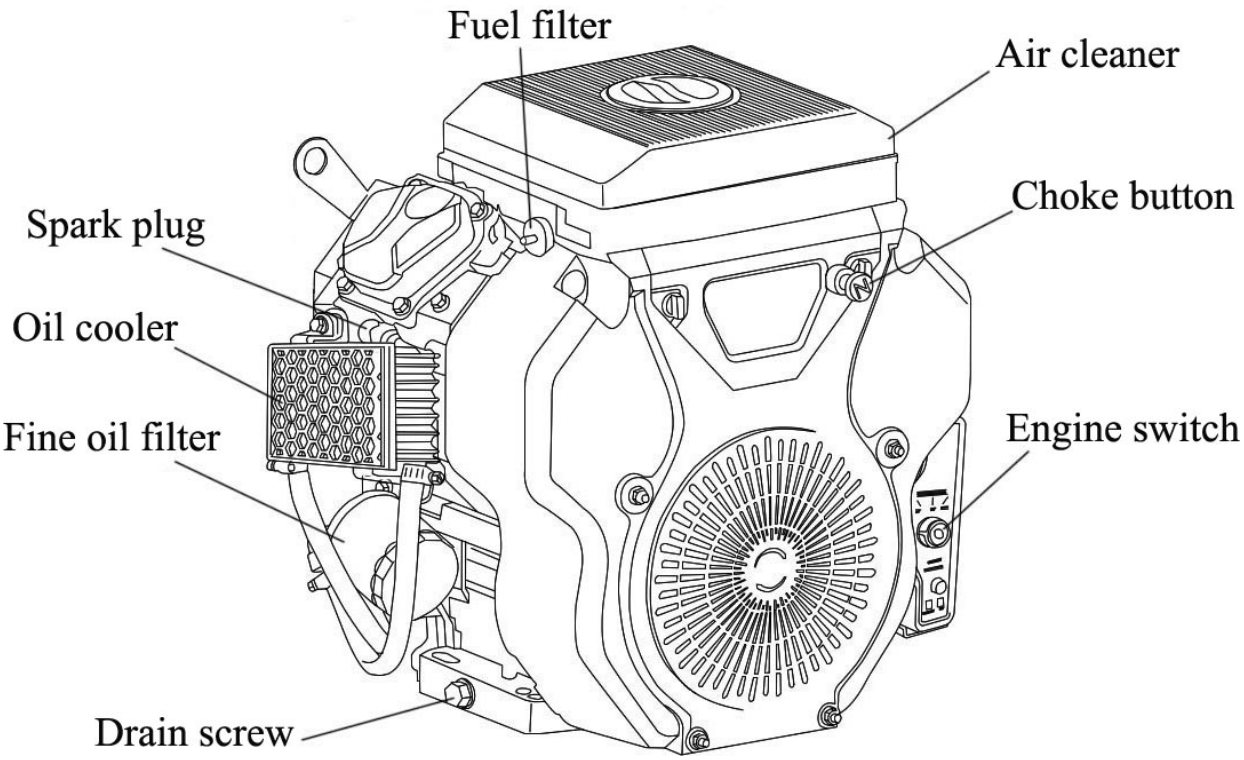

3 Use of engine

1) Engine switch

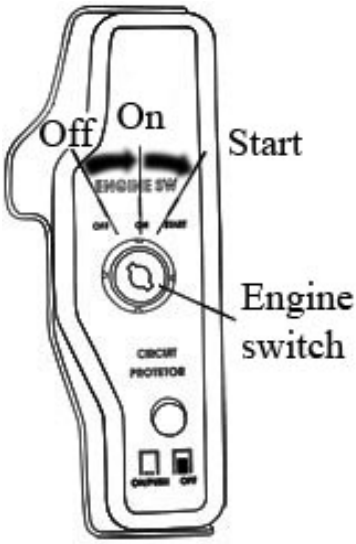

The engine switch is a ignition circuit for starting and stopping engine.
When the engine switch turns to “on” position, the engine runs, when the switch turns to “off” position, the engine stops.

2) Choke button

The function of the choke button is to open or close the choke valve in the carbureter. When pull out the button, the choke valve is closed, in such case, it is prone to start the coldengine. When the engine works normally, it is required to push the choke button in, that is to say the choke valve is in opening position,

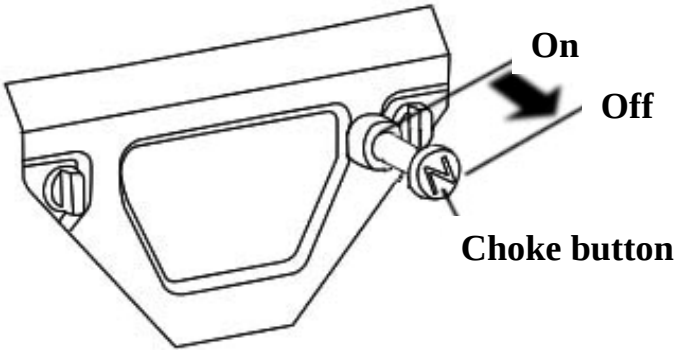

3) Regulation lever

Regulate the position of the regulation lever to get the desired speed.

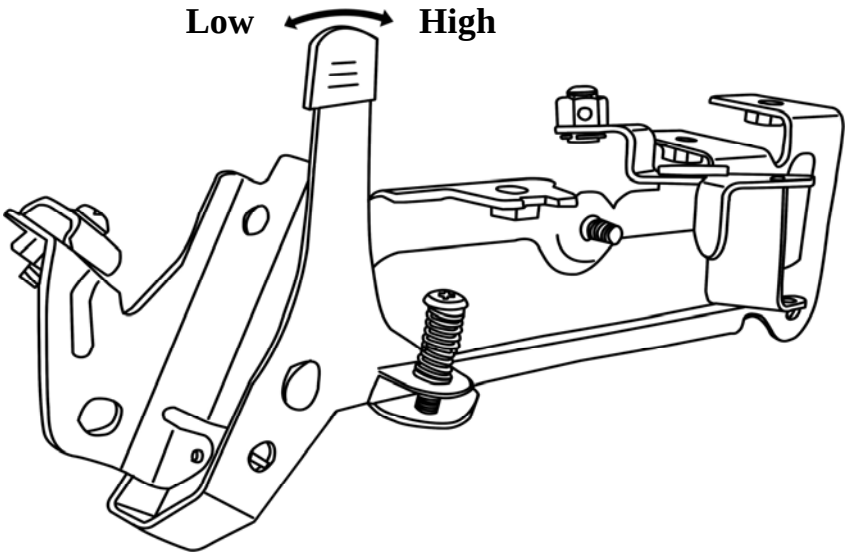

For a reasonable speed of the engine, please refer to indicated parameters of the matched device.

4) Engine protecting system

The engine protecting system is designed to protect engine from damage because of lack of oil in the crank case. When the engine oil is lower than the safe level line, the engine protecting system will work to stop the engine automatically (the engine switch is still in “on” position).

If the engine stops automatically but can not start again, first of all, check the oil level, if fault remains, do other inspection.

4. Check before operation

Routine inspection

- Observe the leakage of engine oil and fuel.
- Observe damage.
- Check guard cover and cap position, and the tightness of screw, bolt and nut.

Check engine oil

Caution After stalling, place the engine in level position, then check oil level.

1) Pull out the oil ruler and clean it.
2) Plug in the ruler thoroughly and take it out again to check the oil level.
3) If the oil level is lower than the low limit, remove the filler cap and fill the recommended oil till it goes up to the top limit.
4) After filling, keep in mind to reinstall the ruler and tighten the cap.

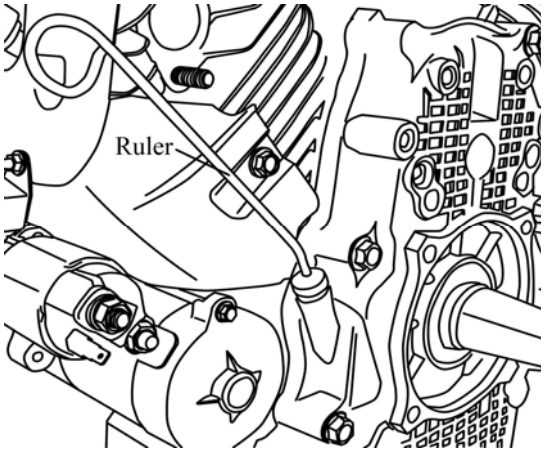

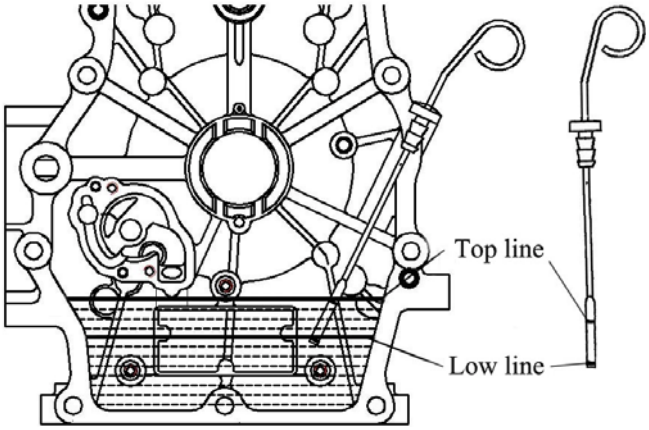

When the engine oil level is lower than the safe line, the engine protecting system will stops the engine automatically. To avoid engine stalling accidentally, check the oil level before starting the engine each time.

Caution When filling fuel, the fuel level does not exceed shoulder of fuel filter (i.e. top level).。

It is recommended to fill lead free petrol, grade No 90 or higher.

When use lead free petrol, carbonized dirt is less, thus it can prolong the service life of exhaust system.

It is prohibited to use waste fuel, contaminated fuel and fuel mixed with engine oil.

C Check air cleaner

Remove the air cleaner case to check the element，clean or replace, if necessary.

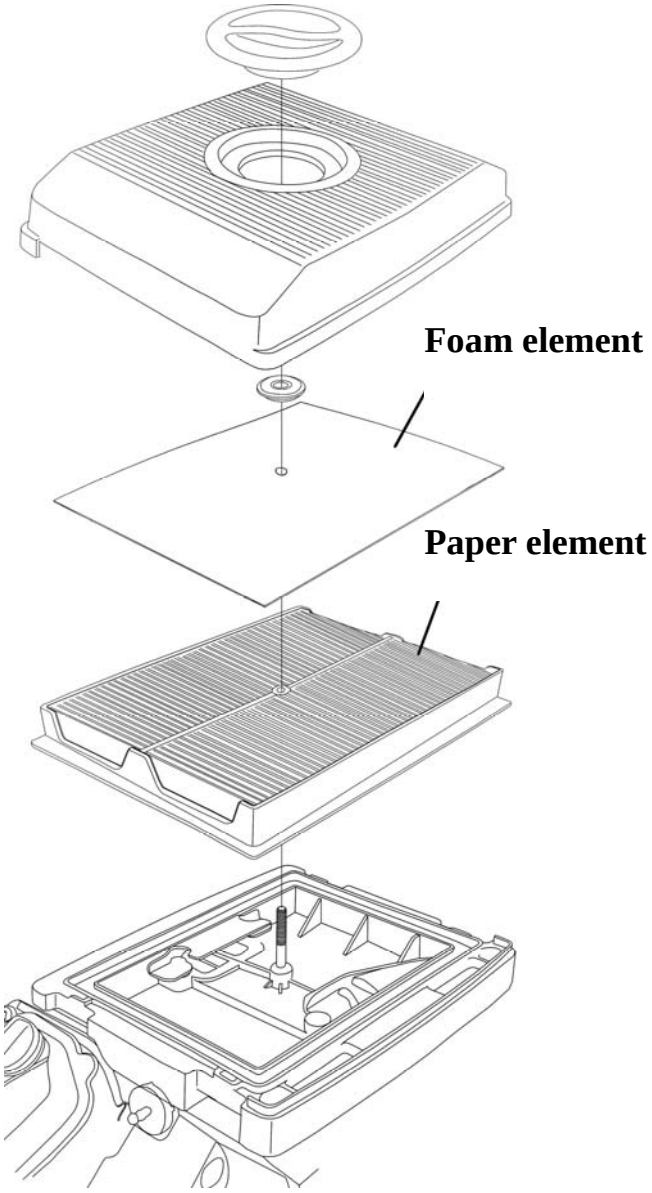

5. Start Engine

1) When coldstart is performed, the choke button must be “off” position. When hotstart is done, the choke button must be “on” position.

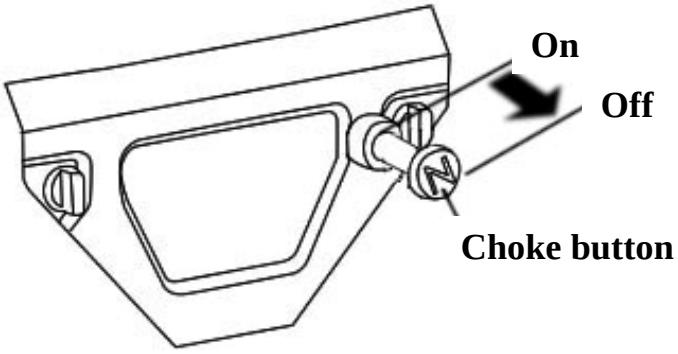

2) Regulate the position of the regulation lever from “low ” to “high”, and stop it at 1/3 from the “high” speed.

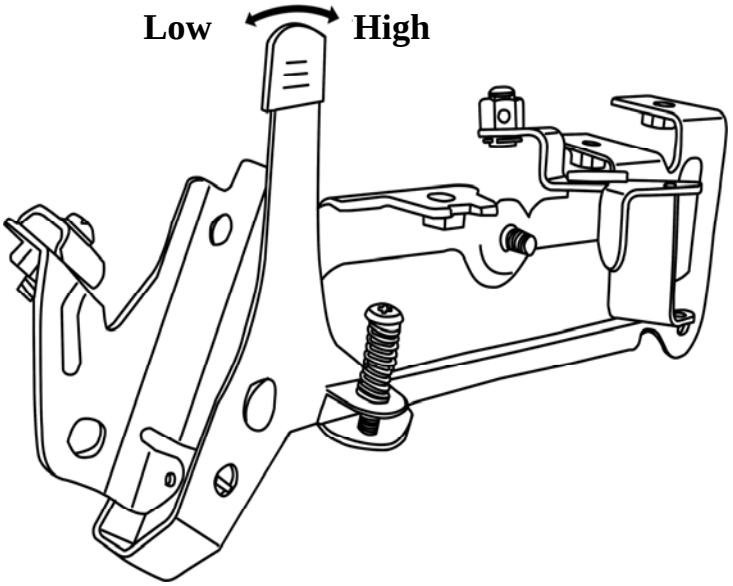

3) Turn the engine switch to”on” position.

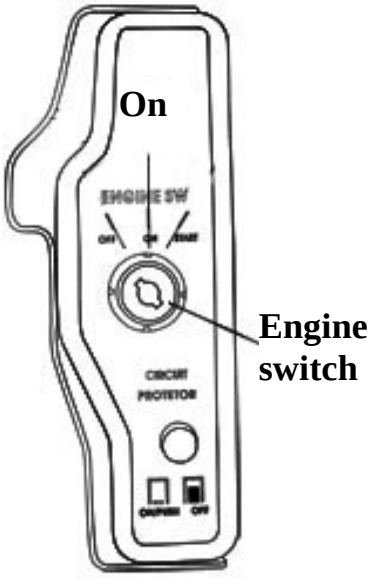

4) If the engine starts in the condition that the choke button is pulled to “off” position, when the engine warming up, push the choke button gently to “on” position. If hotstart is done, the choke button is kept in “on” position.

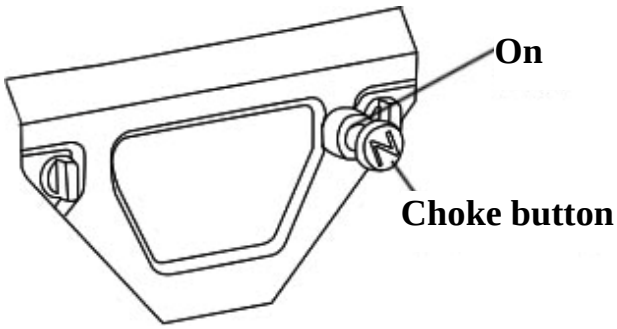

6. Stop engine

In emergency, it is an easy way to stop the engine, just turn the engine switch to “off”.
But as a rule, stop engine as follows:

1) Turn the regulation lever to “low” position.

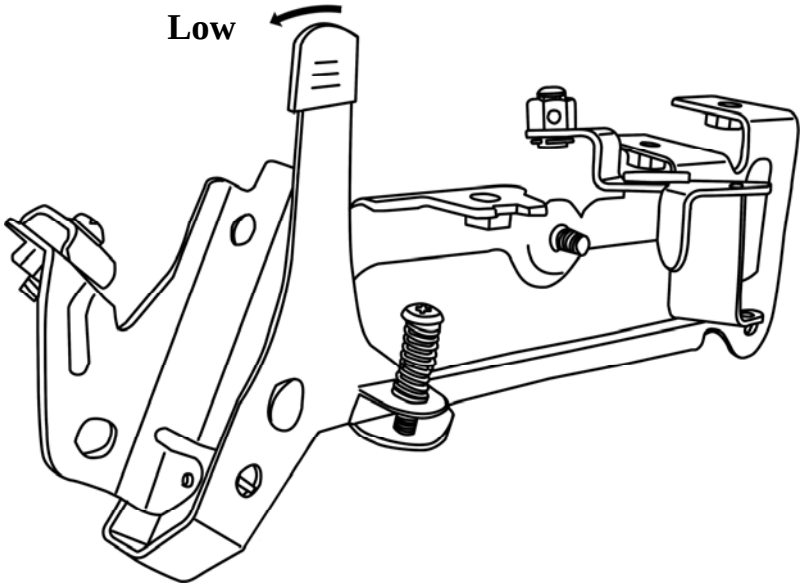

2) Stop the engine.

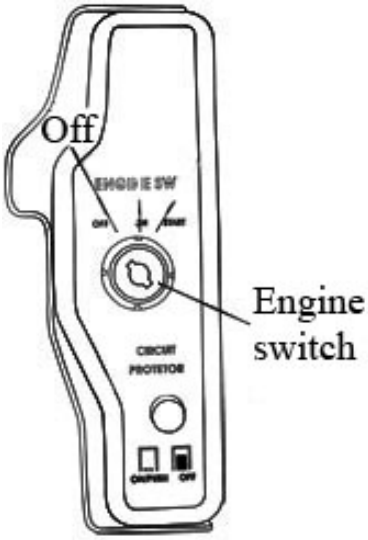

7. Maintenance

Maintenance schedule

Periodical maintenance schedule		Every time	20 hours or the first month	50 hours or every 3 month	100 hours or every 6 month	300 hours or every year
Engine oil	Oil level	○				
	Replace		○		○	
Fine oil filter	Replace					○**(2) or** 200 hours
Air cleaner	Check	○				
	Clean			○(1)		
	Replace					○(3)
Fuel depositing cup	Clean				○	
Electrolyte level of battery	Check	○				
Spark plug	Clean				○	Replace
Valve gap	Regulate					○(2)
Fuel pipe	Replace	Every 2 years (2)				

○ Maintenance caution
(1) Maintain the engine more frequently in use of dusty area.
(2) The maintenance should be performed by your after-service facilitator unless you have proper tools and specialized technique.
(3) Only replace element.

Replace oil in crankcase

After warming up the engine, it is easy to drain the engine oil to ensure the engine oil is rapidly drained out.

1) Place a container under the engine for containing used oil.. Then, remove the oil ruler and loosen the draining screw and washer,.
2) After drainage of used oil, reinstall the draining screw and washer and tighten them.

In view of environmental protection, please take a proper way to dispose the waste oil. It is recommended to send the waste oil to the local service station or recycle center. Never throw waste oil barrel to refuse tip, dump the waste oil on ground or in ditches.

3) Place the engine in level position, refill recommended oil to the top line.

The filling capacity of the engine：
Not replace fine oil filter：1.3L
Replace fine oil filter：1.5L

4) Reinstall the oil ruler and tighten filler cap.

Recommended engine oil：

Engine oil for 4-stroke engine:
API classification: SE、SF or equivalent to SG, SAE 10W-30.

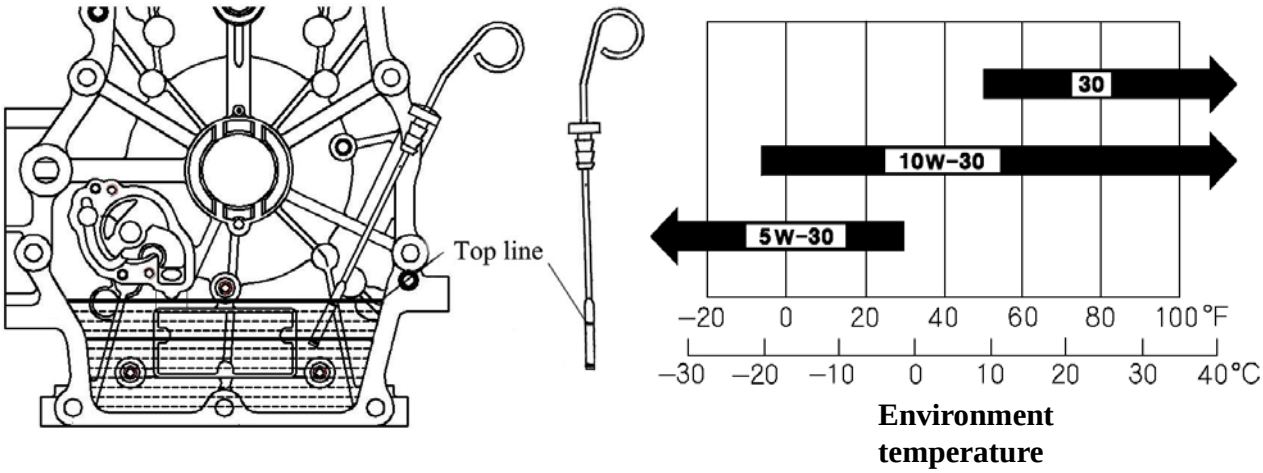

If the range of temperature change in your area is limited in the above chart，this oil grade can be selected according to it.

Maintain air cleaner

If the air cleaner is dirty, it affects air inlet, the power of engine reduced. If the running

place is dust, maintenance must be done more frequently than that shown in maintenance schedule,..

Caution In the case of no element or element damaged, the dust will be sucked into the engine and result in rapid wear of the engine.

Double-element air cleaner

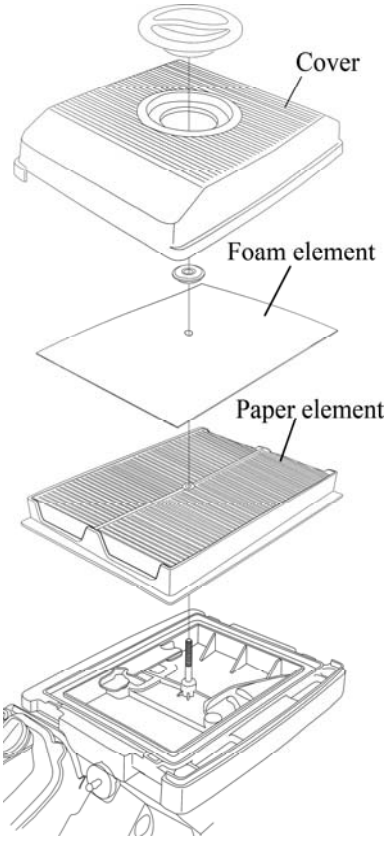

1) Unscrew the cap nut, and remove the case.

2) Remove the washer，take out the paper and foam elements.

3) Separate the paper element from the foam one.

4) Check the elements and replace if necessary. As a rule, when reaching the period specified in maintenance schedule, replace the paper element

Clean paper element：

Strike the element several times to remove dust deposited on it or blow out with high pressure draft （less than2.1kg/cm^2）, from inside to outside of the element, Never remove the dust with brush, or the dust will enter the fiber to block the vent holes..

Clean foam element：

Clean the foam element with soap water、rinse and dry it；or clean it with high fire-point resolvent and dry it.

5) Clean air cleaner bracket and case. Prevent dust from sucking into the carburetor along the inlet pipe.

6) Assemble the foam element and paper element.

7) Install the case and tighten the cap nut.

Spark plug

It is recommended to use spark plug,F7TC or equivalent one.

Caution Spark plug of incorrect type may damage the engine.

1) Remove the spark plug cap，Clean dust around the spark plug.
2) Unscrew the spark plug with a special socket wrench.

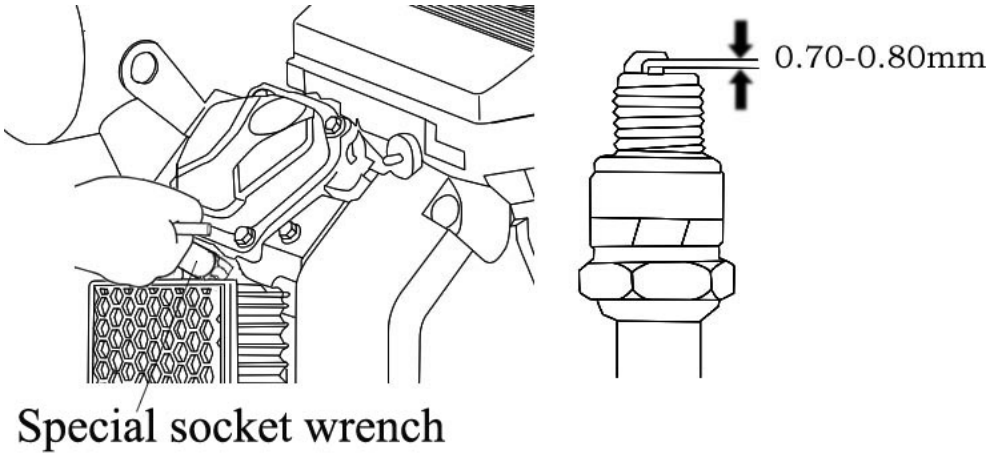

3) Check spark plug. If the electrode has damaged, or isolator has broken, replace the spark plug. The clearance of the spark plug electrode should be 0.70-0.80mm. Adjust the side electrode, if necessary.
4) Screw the spark plug with hand carefully to avoid damaging the thread on the head.
5) When the spark plug is in position, tighten the spark plug with the special socket wrench and depress the washer.
   If install the used spark plug，after depressing the washer, retighten it 1/8-1/4 turn.
6) Reinstall the spark plug cap.

Regulate idle speed

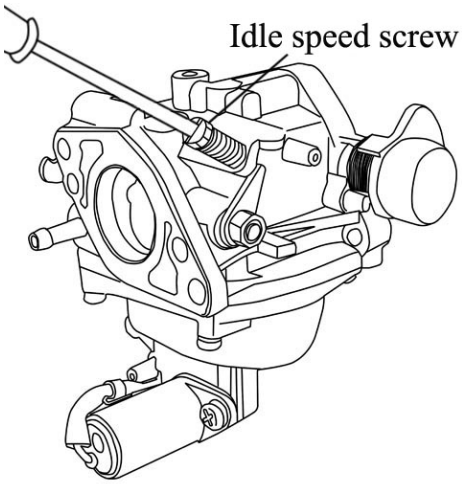

1. Start the engine outdoor，warm up it for a while.

2. Put the regulation lever to “low” position.

3. Regulate the idle speed with a special tool，make idle speed within the range:

   Standard idle speed：1500±150rpm。

8. Engine storage

After the engine stalling, do not clean the engine till it cools for over half an hour. Clean all surfaces of the engine and mend the damaged paint film, apply antirust oil on the rusting area.

Caution

Do not rinse the engine with high pressure water, because the water may enter the air cleaner and the muffler, even enter the cylinder along the inlet line, thus rust may occur. Do not clean the engine till it is cool, because the water splashed on the hot engine is harmful to the engine.

1) Place a container under the carburetor (under overflow pipe).

2) Unscrew the draining screw of the carburetor， drain the fuel in the carburetor from the overflow pipe to the container. After finishing that, tighten the draining screw.

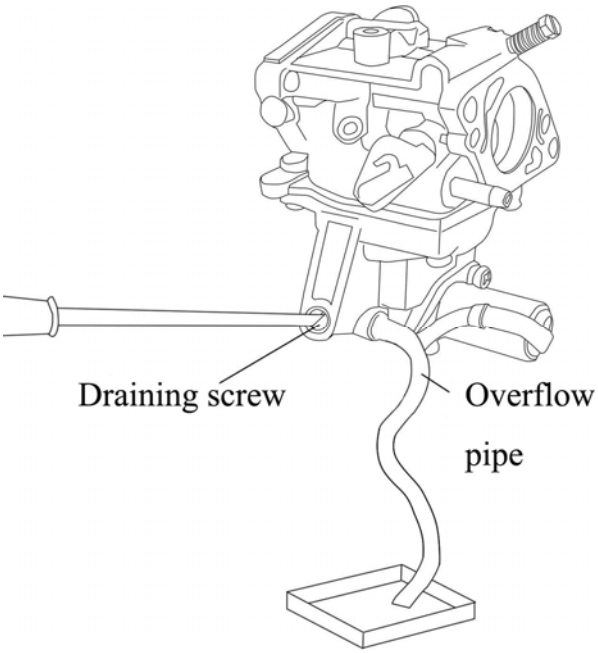

3) When using the engine again, replace oil.

4) Remove two spark plugs.

5) Fill 5lm-10lm oil in the head.

6) Rotate the engine in several turns to

7) scatter the oil in the head.

8) Reinstall the spark plug.

9) Rotate the engine slowly till a drag is felt. In such case, all valves are closed to prevent the humidity from air.

10) Cover the engine with a dust cap, and place it in dry and ventilating area.

11) In storage，the battery is charged every one month, it will prolong the service life of the battery.

10. Troubleshoot

1）Difficult to start

Phenomena				Causes	Elimination
Cylinder Pressure normal	Spark plug normal	Fuel system abnormal	Fuel line blocked	No fuel，or fuel cock off	Fill fuel，turn on fuel cock
				Vent on fuel tank cap blocked	Unblock
				Fuel cock blocked	Clean
				Orifice improperly regulated or blocked	Regulate、clean、blow off
				Needle valve or float jammed	Repair or replace
			Fuel line unblocked	Dirt fuel or deterioration	Replace fuel and clean carburetor
				Fuel mixed with water	Replace fuel and clean carburetor
				Exceeded fuel in cylinder	Drain fuel and dry spark plug
				Fuel grade not correct	Fill specified fuel
	Fuel system normal	Spark normal	Spark Plug poor	carbonized、electrode dirt	Clean carbonized dirt
				Isolator damaged	Replace spark plug
				Electrode burnt out	Replace spark plug
				Improper spark plug clearance	Regulate clearance
		Spark plug normal	No spark	High tension wire damaged	Replace high tension wire
				Ignition coil damaged	Replace high tension coil
				Magnetic intensity inefficient	Magnetize or replace
Cylinder Pressure abnormal	Fuel system normal	Ignition System normal	Spark plug normal	Piston ring worn out or broken	Replace
				Piston ring agglutinated	Clean carbonized dirt
				Spark plug without washer or tightened loosely	Fit washer or tighten
				Leakage between head and block	Replace cylinder
				Poor air tight at valve	Grind or replace

2）Inefficient power

Phenomena	Causes		Elimination
Speed increase slowly while accelerating , even decrease or engine stall in severe condition	Ignition system	Improper timing	Replace ignition coil
	Fuel system	Air mixed in fuel line	Exhaust air
		Orifice regulated improperly	Regulate
		Needle valve or orifice blocked	Clean , blow off
		Fuel cock blocked	Clean or replace
		Carbonized in combustion chamber	Clean carbonized dirt
	Inlet system	Air cleaner block	Clean or replace element
		Inlet system leakage	Repair or replace
	Poor compression	Piston 、cylinder、piston ring worn out	replace
		Leakage between block and head	Replace gasket
		Incorrect valve clearance	Regulate
		Valve untight	Grind or replace

3）Sudden stall

Phenomena	Causes		Elimination
	Fuel system	Fuel run out	Fill fuel, unblock
Sudden stall at run		Carburetor blocked	Check fuel line, unblock
		Oil leaked from carburetor float	Repair float
		Needle valve jammed	Repair needle valve
	Ignition system	Spark plug sparked through Carbonized dirt makes short circuit	Replace spark plug
		Spark plug electrode dropped off	Replace spark plug
		High tension wire dropped off	Repair or replace
		Ignition coil broken down	replace
	Others	Severely scuffing of cylinder bore or valve dropped off	Repair or replace damaged part

4) Engine overheating

Phenomena	Causes	Elimination
Engine overheating	Improper timing	Replace ignition coil
	Insufficient engine oil	Fill engine oil
	Outlet blocked	Clean outlet
	Ventilation hood leakage	Repair damaged place
	Air conduit blocked with foreign thing	Clean radiator
	Cool fan failed	Reinstall fan
	Piston ring failed to result in cylinder and crank case flowing by	Replace worn part
	Engine runs at over speed	Check regulating system or replace regulating gear

5) Abnormal noise

Phenomena	Causes	Elimination
Slap	Piston, piston ring worn out	Replace worn part
	Connection rod、piston pin, pin hole worn out	Replace worn part
	Crank worn	Replace or repair
	Piston ring broken	Replace piston ring
Knocking with metallic sound	Exceeded carbonized dirt in combustion chamber	Clean carbonized dirt
	Spark plug electrode clearance too small	Regulate electrode clearance
	Severely enriched fuel	Check Carburetor
	Improper fuel grade	Replace fuel
	Engine overheating	Refer to overheat fault column
Abnormal noise	Regulate valve improperly	Regulate valve clearance
	Loose connection between flywheel and crank	Replace connecting key and reinstall

10. Battery（optional）

Please choose the battery, 12V, rated capacity of 20Ah. or more。

Caution Never connect the positive and negative electrodes in reverse, otherwise, it will damage the engine and battery severely.

Check the electrolyte level in cell if they are in the position between the top limit line and low limit line. If the electrolyte level is lower the low limit line, screw out the cap and fill distilled water till it rises up to top limit line. All electrolyte level in cells should be almost in the same height.

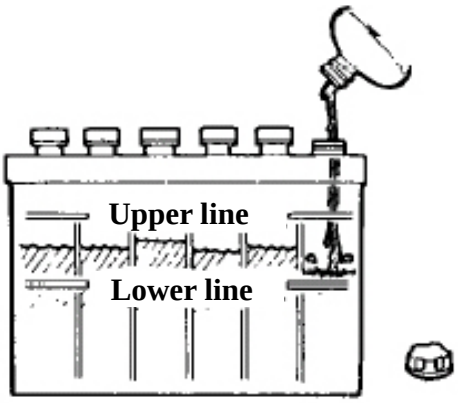

Warning

- If operate improperly, the battery may explode，thus, hurt may occur to the persons around, therefore, keep the smoke and flame and inflammable things away from the battery.
- the battery will release explosion gas, keep the fire away from it. When charge the battery or use the battery, keep ventilating.

Connect start motor：

Be careful not to connect the terminals in reverse, or short circuit occurs. As usual, connect the positive electrode before do it for negative one.

1) Connect positive wire of the battery to the terminal of start relay.
2) Connect negative wire of the battery to the screw of engine bracket.
3) Connect positive wire of the battery to the positive terminal of the battery.
4) Connect negative wire of the battery to the negative terminal of the battery..

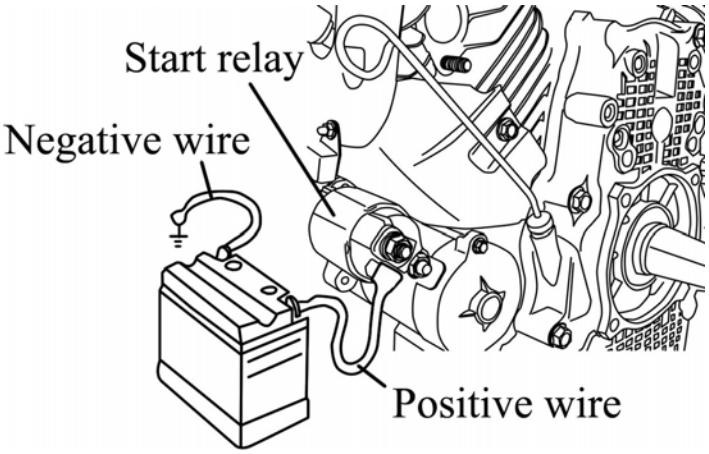

11. Engine parameters

Engine Type	2-cyl、4-stroke、forced air cooling、OHV
Displacement （bore X stroke）	678ml（78X71mm）
Max power (kW/3600rpm)	14.7
Max torsion(N·m) speed(rpm)	43.5/2500
Fuel rate (g/kW·h)	≤360
Idle speed (rpm)	1500±150
Speed fluctuation ratio	≤10%
Compression ratio	8.5:1
Start mode	Powered start
Rotation direction	CCW（face to output side）
Valve gap (mm)	Inlet 0.10~0.15
	outlet 0.15~0.20
Spark plug	F7TC
Plug clearance (mm)	0.7~0.8
Ignition mode	Thyristor no-contact ignition
Type of air cleaner	Double elements
Dimension (mm) L×W×H	455X400X450
Net weight (kg)	45

12. Wiring diagram

Powered starting engine with oil protection system

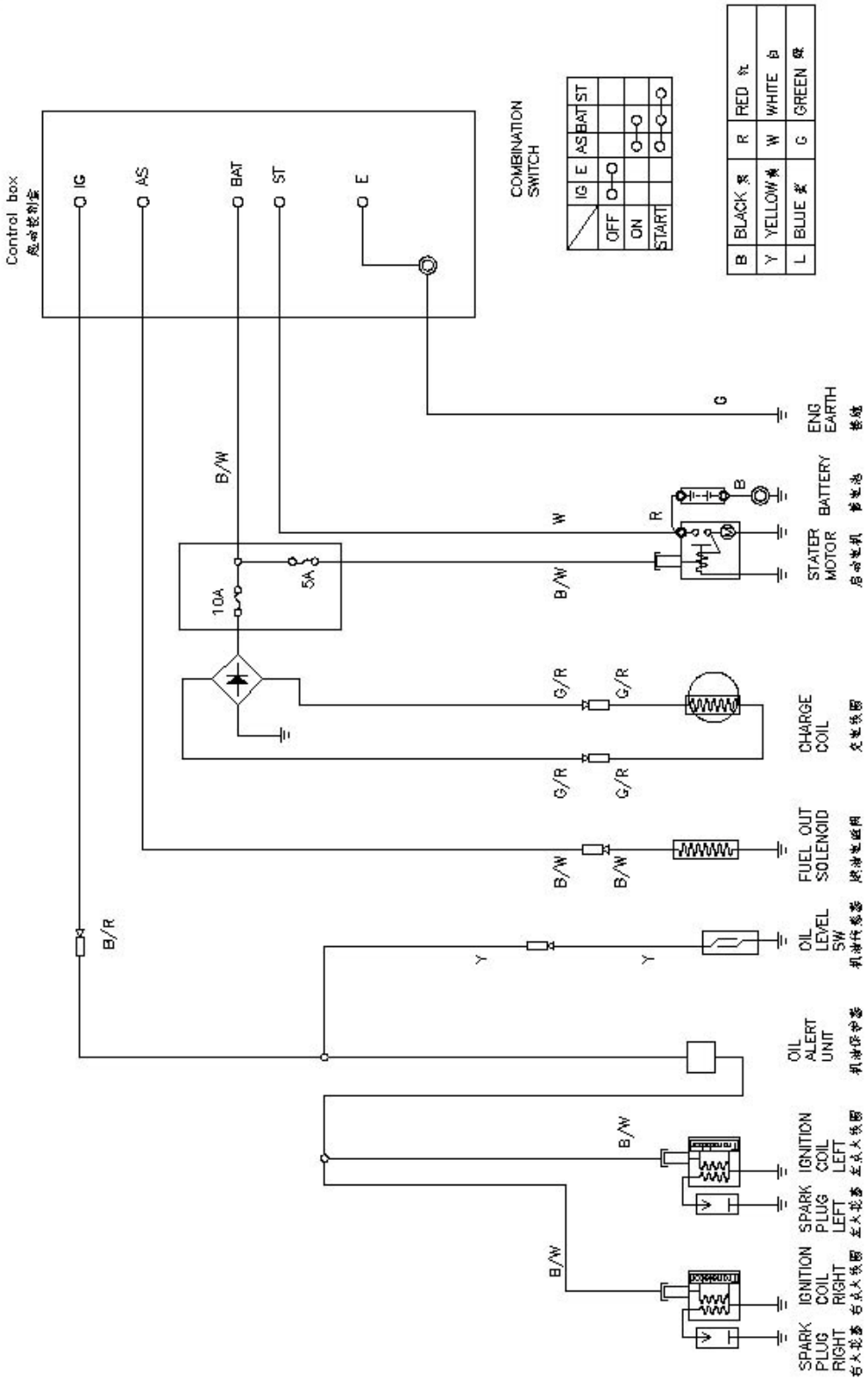

Loncin motor co., Ltd.

Add:No.99Hualong Road,Jiulongpo District,Chongqing,China

Tel:86 23 8980 5678/86 23 8980 8505

Fax:86 23 8906 7566

Email:marketing@loncinengine.com

Website:www.loncinengine.com

PRINTED IN CHINA